

REV24RF..



RCR10/868

Radio set with 7-day room temperature controller REV24RF../SET

Comprising a room temperature controller (with integrated radio transmitter) and receiver with relay outputs

- **Mains-independent, battery-operated room temperature controller featuring user-friendly operation, easy-to-read display and large numbers.**
- **Self-learning two-position controller with PID response (patented).**
- **Operating mode selection:**
  - **7-day automatic mode with max. 3 heating or cooling phases.**
  - **Continuous comfort mode.**
  - **Continuous energy saving mode.**
  - **Protection against frost or overheating.**
  - **Exception day (24 hour operation) with max. 3 heating or cooling phases.**
- **A separate temperature setpoint can be entered in automatic mode and for the exception day for each heating or cooling phase.**
- **Heating zone control.**
- **Possibility to control cooling equipment.**
- **Advantage for retrofitting, renovating, and reconstruction purposes (completely wireless room unit).**

Use

Room temperature control in:

- Single-family and vacation homes.
- Apartments and offices.
- Individual rooms and professional office facilities.
- Commercially used spaces.

Control for the following equipment:

- Magnetic valves of an instantaneous water heater.

- Magnetic valves of an atmospheric gas burner.
- Forced draught gas and oil burners.
- Electrothermal actuators.
- Circulating pumps in heating systems.
- Electric direct heating.
- Fans of electric storage heaters.
- Zone valves (normally open and normally closed).
- Air conditioning and cooling equipment.

Function

- Bidirectional radio transmission.
- PID control with self-learning or selectable switching cycle time.
- 2-point control.
- 7-day time switch.
- Preselected 24-hour operating modes.
- Override function.
- Holiday mode.
- Party mode.
- Protection function (protection against frost or overheating).
- Information level to check settings.
- Reset function.
- Sensor calibration.
- Heating or cooling.
- Minimum limitation of setpoint.
- Periodic pump run.
  Protection against valve seizure.
- Optimum start control in the morning (P.1).
- Synchronization to radio time signal from Frankfurt, Germany (REV24RFDC).
- Manual override of the receiving relay.

Type summary

Radio set comprising:
- Room temperature controller REV24RF with 7-day time switch,
  Base and receiver RCR10/868 **REV24RF/SET**

Radio set comprising
- Room temperature controller REV24RFDC with 7-day time switch,
  Receiver for time signal from Frankfurt, Germany (DCF77),
  Base and receiver RCR10/868 **REV24RFDC/SET**

Ordering

Please indicate the type number as per the "Type summary" when ordering.

Delivery

The controller/transmitter REV24RF.. is delivered with batteries.

Mechanical design

Room controller and base	Plastic casing with an easy-to-read display and large numbers, easily accessible operating elements, and removable base. The casing accommodates the electronics with the DIP switches. The easily accessible battery compartment allows for easy exchange of two 1.5 V alkaline batteries, type AA.
Base and table stand	The base helps attach the room controller to the wall. The supplied table stand allows you to stand the controller anywhere in the room. You can manually attach the table stand without tools.

Receiver

Plastic housing with large operating elements, removable cover and easily accessible terminal block with lots of space to attach the wires. You can mount and wire the unit on most commercially available recessed conduit boxes or directly on the wall. The potential-free changeover contact and the antenna for reception are integrated in the unit.

Display and operating elements

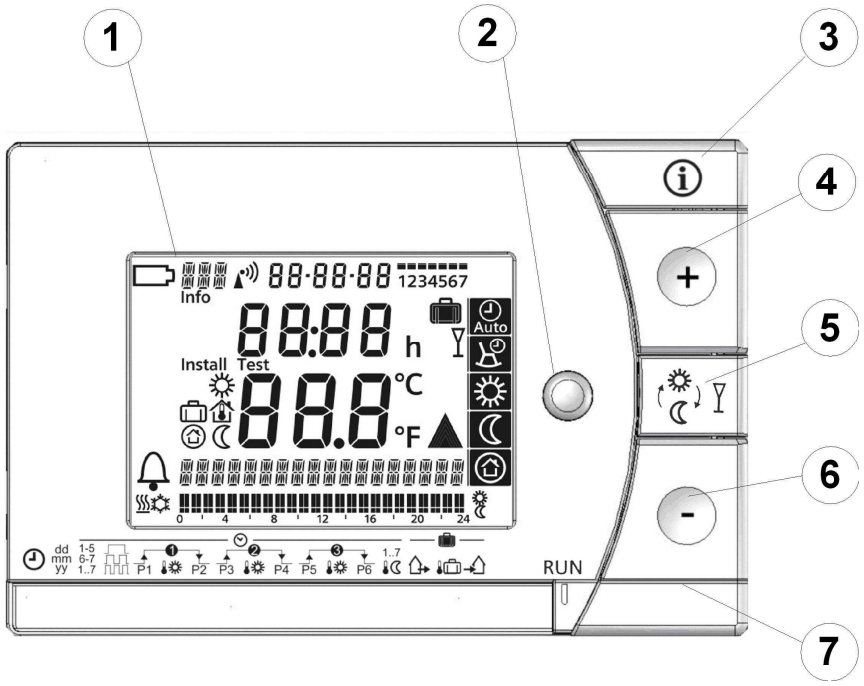

1	**Display**		
	Change battery	22:30	Time of day
	Alarm	21.0°C	Room temperature (measured)
	Heating mode	TEMPERATURE	Clear text display line (max. 18 spaces)
	Cooling mode		24 hour timeframe with switching pattern with flashing time cursor
WED	Weekday (max. 3 spaces)		
Info	Info	12345	Weekday block
Without language selection	Setpoint for comfort mode	67	Weekend block
		7	Weekday
	Setpoint for absence	**h**	Time unit
	Room temperature		Absence/holiday mode set
	Setpoint for frost protection mode		Absence/holiday mode active
	Energy saving mode setpoint		Party mode active
	Time signal from Frankfurt	**°C / °F**	Temperature unit °C or °F
17.03.08	Date (day - month - year)		Heating/cooling/pump on

2	**Operating mode selector**
	Automatic weekly mode with max. three heating or cooling phases per day.
	Exception day with max. three heating or cooling phases.
	Continuous comfort mode (= continuous comfort temperature).
	Continuous energy saving mode (= continuous energy saving temperature).
	Protection mode (protection against frost or overheating).

3	**INFO**
	Pressing the Info button once illuminates the display. Illumination automatically turns off after a short period of time. Pressing the Info button again activates the information display: **Info** is lit. The unit first displays queued error messages followed by important information (e.g. time switch programs, etc.).

4	**Plus button**
	Increase values, set time, or make a selection.

5	**Override button / party mode**
	In the time switch program, this button allows you to quickly change from the active temperature level to the next and back. Thus, you can quickly change to energy saving temperature when you leave the apartment for a short period of time, thus saving energy. The display indicates the change. It is valid only until the next switching time. **ty mode: Press the button for 3 seconds.** Party mode is available only in operating modes  and . In party mode, the controller controls to a freely selectable temperature for a freely selectable period of time. In party mode, symbol  is displayed along with the end of party mode.

6	**Minus button**
	Decrease values, set time, or make a selection.

7	**Program selection slider**
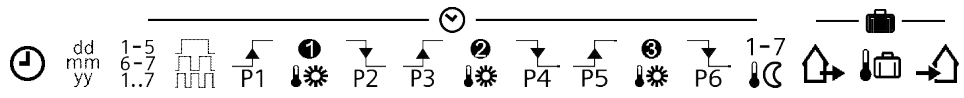	
	Time
dd mm yy	Day – Month – Year (2 spaces for day, month, and year).
1-5 6-7 1..7	Weekday, weekend, or individual day blocks.
	1, 2, or 3 comfort phases.
P1	Start Comfort phase 1
P3	Start Comfort phase 2
P5	Start Comfort phase 3
❶	Setpoint Comfort phase 1
❷	Setpoint Comfort phase 2
❸	Setpoint Comfort phase 3
P2	End Comfort phase 1
P4	End Comfort phase 2
P6	End Comfort phase 3
1-7	Energy saving temperature in the automatic mode and exception day time switch programs.
	Start of absence.
	Temperature setpoint during absence.
	End of absence.
RUN	Slider position RUN allows for closing the cover.

Operating modes

Operation with time switch program

The controller offers the two time switch programs Auto and .

Enter a start time and end time for each comfort phase. Also comfort temperature setpoint can be freely entered for each comfort phase. Between the comfort phases the controller always switches to the same, freely selectable energy saving temperature setpoint.

Example with 3 heating phases

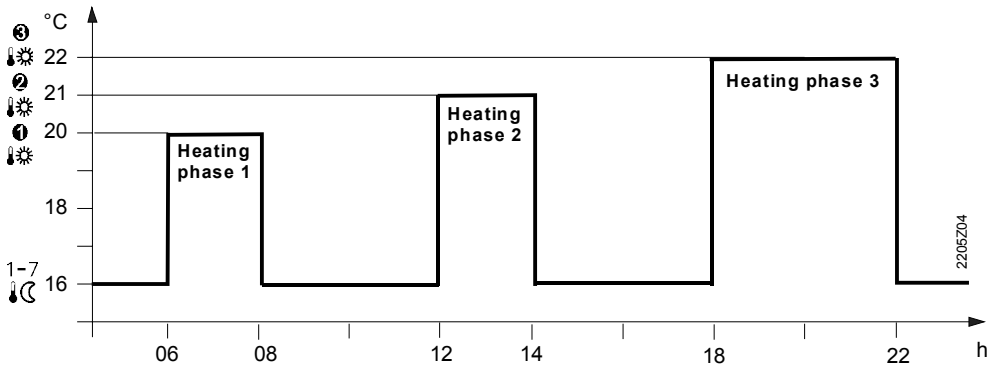

Continuous operating modes

The controller also offers the three 3 continuous modes comfort mode, energy saving mode and frost protection mode.

Setpoints

You can freely adjust the setpoints for the weekly and 24-hour operating modes.
Setting range for all setpoints without setpoint limitation 3…35 °C.
Setting range for all setpoints with setpoint limitation 16…35 °C.

Factory setting

	Factory setting for heating	Factory setting for cooling
❶ ❷ ❸	20 °C	24 °C
1–7	16 °C	28 °C
	8 °C	35 °C
	12 °C	30 °C

Factory settings: Switching times						
Comfort phases	P1	P2	P3	P4	P5	P6
1.	07:00	23:00	PASS	PASS	PASS	PASS
2.	06:00	08:00	17:00	22:00	PASS	PASS
3.	06:00	08:00	11:00	13:00	17:00	22:00

7-day time switch

Three different switching patterns are available to simplify entry of switching times. These can be assigned as blocks to the corresponding weekdays 1…5 and weekend days 6…7. As a result, you need to adapt the switching times and room temperatures only once for each block.

Switching pattern	Blocks
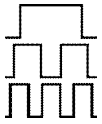	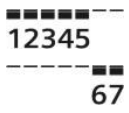

You can also enter individual days  .

Enter holidays or absences

You can enter the beginning, temperature and end of your holidays. At the beginning of the holidays, the controller switches to the desired holiday temperature and returns to the previously set operating mode at the end of the holidays.

In holiday mode, symbol is displayed along with the end of holiday mode.

Proceed as follows to enter your settings:

	Set slider to position 15 (start of absence): Press + or - to set the start date for your holidays.
	Set slider to position 16 (temperature during absence): Press + or - to set the desired temperature while on holidays.
	Set slider to position 17 (end of absence): Press + or - to set the end date for your holidays.
RUN	Return the slider to position RUN. Symbol is displayed to the left of the Auto symbol. Press , +, -, or move the slider to end holiday mode prematurely.

DIP switches

	DIP switch △ **ON** / ▽ **OFF**	**1**	**2**	**3**	**4**	**5**	**6**	**7**	**8**	**9**	**10**		
A	Sensor calibration On	△					△					Periodic pump run and anti-lime function On	**E**
	Sensor calibration Off	▽					▽					Periodic pump run and anti-lime function Off	
B	Setpoint limitation 16…35 °C		△					△	△			Start optimization: 1 h/°C	**F**
	Setpoint limitation 3…35 °C		▽					△	▽			Start optimization: ¼ h/°C	
C	Temperature display °F			△				▽	△			Start optimization: ½ h/°C	
	Temperature display °C			▽				▽	▽			Start optimization: Off	
D	PID self-learning				△	△				△		❄ (Op. mode: Cooling)	**G**
	PID 6				△	▽				▽		♨ (Op. mode: Heating)	
	PID12				▽	△					△	Quartz	**H**
	2-point				▽	▽					▽	Radio clock	
J	DIP switch reset After you change one or several DIP switch positions, you must press the DIP switch reset button to reset the DIP switch. **Otherwise, the previous setting remains active!**												**J**
	Factory setting: All DIP switches to ▽ OFF												

A Sensor calibration:
DIP switch 1

If the displayed room temperature does not match the measured room temperature, the temperature sensor can be recalibrated.
Set DIP switch to ON and press the DIP switch reset button:
CAL symbol is displayed. The currently measured temperature flashes.
Press + or - to recalibrate by max. **± 5 °C**.
Set DIP switch to OFF and press the DIP switch reset button to save the settings.

B Setpoint limitation:
DIP switch 2

The minimum setpoint limitation of 16 °C prevents undesired heat transfer to neighboring spaces in buildings featuring several heating zones.
DIP switch ON: Setpoint limitation **16…35 °C**.
DIP switch OFF: Setpoint limitation **3…35 °C** (factory setting).
Press the DIP switch reset button to save the settings.

C Temperature display in °C or °F:
DIP switch 3

DIP switch ON: Temperature display in **°F**.
DIP switch OFF: Temperature display in **°C** (factory setting).
Press the DIP switch reset button to save the settings.

D Control behavior:
DIP switches 4 and 5

The REV24… is a two-position controller with PID control. The room temperature is controlled through cyclic switching of an actuating unit.

DIP switches 4 ON and 5 ON: **PID self-learning**
Adaptive control for all applications.

DIP switches 4 ON and 5 OFF: **PID 6**
Fast controlled system for applications in locations with large temperature deviations.

DIP switches 4 OFF and 5 ON: **PID 12**
Normal controlled system for applications in locations with normal temperature deviations.

DIP switches 4 OFF and 5 OFF: **2-point**

For complex controlled systems, simple two-position controller with 0.5 °C switching difference (factory setting).

Press the DIP switch reset button to save the settings.

E Periodic pump run and anti-lime function: DIP switch 6

Only applicable with controlled circulating pump or valve!

This function protects the pump or valve during extended OFF periods against possible seizure caused by liming. Periodic pump run is activated every 24 hours at 12 p.m. for three minutes (symbol ▲ is displayed during active pump run).

DIP switch ON: Pump run ON.

DIP switch OFF: Pump run OFF (factory setting).

Press the DIP switch reset button to save the settings.

F Start optimization: DIP switches 7 and 8

Optimization advances the switch-on point P.1 to ensure that the selected setpoint is reached at the desired time. The setting depends on the controlled system, i.e., on heat transmission (piping system, radiators), building dynamics (building mass, insulation), and heat output (boiler capacity, flow temperature).

DIP switches 7 ON and 8 ON: 1 h/°C For slow controlled systems.

DIP switches 7 ON and 8 OFF: ¼ h/°C For fast controlled systems.

DIP switches 7 OFF and 8 ON: ½ h/°C For medium controlled systems.

DIP switches 7 OFF and 8 OFF: OFF Off, no effect (factory setting).

Press the DIP switch reset button to save the settings.

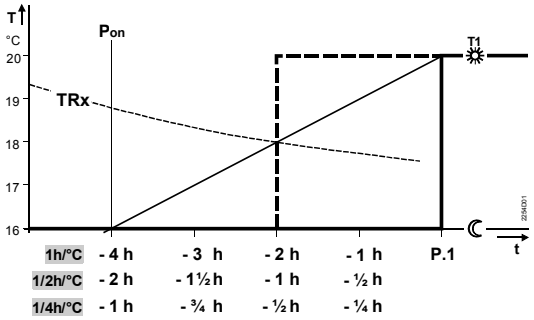

Key for diagram:

T Temperature (°C)

t Forward shift of switch-on point (h)

TRx Room temperature actual value

Pon Starting point for optimized heat-up time.

G Operating mode heating or cooling: DIP switch 9

The controller can be switched over for cooling applications on DIP switch 9.

DIP switch 9 ON: Cooling

DIP switch 9 OFF: Heating (factory setting).

Press the DIP switch reset button to save the settings.

H Radio clock: DIP switch 10

Only applicable to REV..DC (with integrated DCF77 receiver to receive time signal from Frankfurt, Germany)!

DIP switch ON: Clock run by controller-internal quartz.

DIP switch OFF: Time signal DCF77 from Frankfurt, Germany.

Press the DIP switch reset button to save the settings.

Note on synchronization

During startup, REV..DC synchronizes automatically to the time signal (DCF77) from Frankfurt, Germany. Synchronization takes max. 10 minutes. Synchronization restarts each time you press the button or move the program selection slider from the RUN position during these 10 minutes. Siemens recommends to set the desired settings upon startup, install the REV..DC in the desired location, and not carry out any actions on the REV..DC for the next 10 minutes.

In normal operation, the REV..DC synchronizes to the radio clock every day at 3:10 a.m.

Note on reception

The time signal from Frankfurt is modulated to a radio signal. The reception of this radio signal depends on the distance to Frankfurt, atmospheric conditions as well as the location where the REV..DC is installed. Siemens cannot guarantee that the REV..DC can receive the time signal from Frankfurt at any time and any place.

No reception

The radio clock symbol is deactivated and an error message is displayed if the clock was not able to synchronize the time for 7 consecutive days. The controller then runs on the internal quartz.

J DIP switch reset

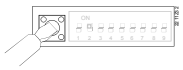

After you change one or several DIP switch positions, you must press the DIP switch reset button to reset the DIP switch.
Otherwise, the previous setting remains active!

Access to the expert level

Set the program selection slider to RUN. Press + and - simultaneously for 3 seconds, release the buttons, and within 3 seconds press and hold down ○ and ⚙ simultaneously for 3 seconds, release ⚙, and press ○ for another 3 seconds. This releases the engineering settings. **Install** is displayed.
The display first shows language selection with Code 00. Press the buttons + or - to navigate the settings.
Confirm settings by pressing ⚙.
Press the operating mode selector ○ to exit the engineering settings.

Code list

Function block	Code	Name	Factory setting	Your setting
Basic settings	00	Language	English	
	01	Sensor calibration	off	
	02	Switching differential 2-point	0.5 °C	
LCD optimization	10	Illumination time	10 seconds	
	11	Background brightness	0	
	12	Contrast	0	
Clock settings	30	Time zone Deviation from time signal in Frankfurt (Central European Time CET) (see Note 1)	0 hours	
	31	Start of daylight saving time (see Note 2)	March 31 (03-31)	
	32	End of daylight saving time (see Note 3)	October 31 (10-31)	

Note 1: This entry has no effect if the radio clock either is inactive or not available.
The time signal received from Frankfurt is shifted by the value set in Code 30 (time zone) if the radio clock is active.

Note 2: The time is always changed over at 2 a.m. on the Sunday preceding the set date if there is no radio clock or if it is inactive. The time change is shifted by the value set in Code 30 (time zone) when the radio clock is active.

Note 3: The time is always changed over at 3 a.m. on the Sunday preceding the set date if there is no radio clock or if it is inactive.

Functional check

a) Check the display. If there is no display, check insertion and function of the batteries.
b) Operating mode “Continuous comfort mode“ ☀, read displayed temperature.
c) REV.. in heating mode: Set the temperature setpoint higher than the displayed room temperature (see operating instructions).
REV.. in cooling mode: Set the temperature setpoint lower than the displayed room temperature (see operating instructions).

d) The relay and, as a result, the actuating device must switch at the latest after one minute. Symbol ▲ is displayed. If not displayed:
   - Check actuating device and wiring.
   - It is possible that in heating mode the room temperature is higher than the set temperature setpoint (and lower for cooling mode).

e) Set the temperature setpoint for operating mode “Continuous comfort mode“ ☼ to the desired value.

f) Select the desired operating mode.

Reset

Room controller REV24RF..: Temperature controller data

User-defined settings:

○, [+] and [-] simultaneously for 3 seconds:
This resets all temperature and time settings of the program selection slider to default values (see also "Factory settings" in the operating instructions). The expert settings remain unchanged.
The clock starts at 12 p.m., the date on 01-01-08 (01 January 2008).
During the reset, all display fields are lit and can be checked accordingly.

All user-defined settings plus expert settings:

Press the DIP switch reset button , [+] and [-] simultaneously for 5 seconds:
After the reset, **all factor settings** are reloaded. This applies to the program selection slider as well as to the expert settings.

Room controller REV24RF..: Data from faulty receivers

Simultaneously press the "Test and "Learn" buttons on the rear of the REV24RF.. for 1 second. This deletes all data saved from the receivers listed as faulty in Info mode.
After this reset, the REV24RF.. indicates that all faulty receivers were deleted.

Room controller REV24RF..: Data from all receivers

Simultaneously press the "Test and "Learn" buttons on the rear of the REV24RF.. for 5 seconds. This deletes the data saved from all receivers.
After this reset, the REV24RF.. indicates that no more receivers are connected to the room controller.

Receiver RCR10/868: Data from the room controller

Open the RCR10/886 cover. Simultaneously press the "Learn" and override buttons on the front of the RCR10/868 for 4 seconds. This deletes the data saved from the room controller.
LED_1 flashes red. This indicates that no room controller is connected to the receiver.

Engineering

Room controller REV24RF..:

- Place the room unit in the main living room by considering the following aspects (wall mounting or free placement using stand).
- The distance to the receiver may not exceed 20 meters or 2 floors.
- Choose the place of installation so that the sensor can capture the air temperature in the room as accurately as possible without being adversely affected by direct solar radiation or other heat or cooling sources (about 1.5 meters above the floor for wall mounting).

- Choose the location to ensure largely interference-free transmission. Observe the following:
  - Do not mount on metallic surfaces.
  - Do not mount near electrical cables and equipment like PCs, TVs, microwaves, etc.
  - Do not mount near larger metallic structures or constructional elements with fine metal meshes such as special glass or special concrete.
- Use the DIP switches to adapt the control behavior.
- Recalibrate the temperature sensor (see "Sensor calibration") if the displayed room temperature does not match the room temperature measured.

Mounting the room controller REV24RF.. on the wall

- Mount the unit base for the REV24RF.. in the desired location.
- See also "Mounting and commissioning notes".
- Attach the base first and then slide the unit in the base from top to bottom. You can mount the base on most commercially available recessed conduit boxes or directly on the wall.
- When mounting on a wall, make sure there is sufficient clearance above the unit to allow for removing and refitting the unit.

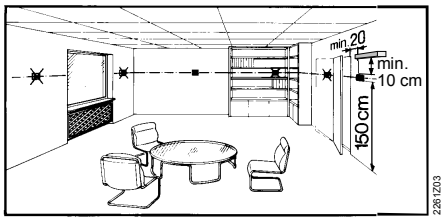

Stand for REV24RF..

- See the installation instructions printed on the stand.
- Place the REV24RF.. in the desired location.

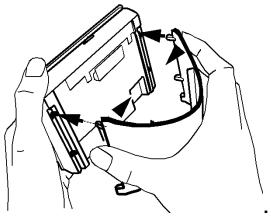

Receiver RCR10/868:

- Install the receiver close to the controlled unit if possible.
- Choose the location to ensure largely interference-free reception. Observe the following for mounting the room unit:
  - Do not mount in a control panel.
  - Do not mount on metallic surfaces.
  - Do not mount near electrical cables and equipment like PCs, TVs, microwaves, etc.
  - Do not mount near larger metallic structures or constructional elements with fine metal meshes such as special glass or special concrete.
- Make sure the location is dry and protected against splash water.
- You can mount the unit on most commercially available recessed conduit boxes or directly on the wall.

Mounting and installation of receiver RCR10/868

⚠ Make sure the receiver is not connected to power during wiring!
Reconnect the unit to power only after the unit is fully mounted.

- During installation, attach first and wire the unit rear without cover (L/N = mains 230 VAC, LX/L1 = consumer). Slide in the cover from above, swing downward and secure with a screw in the upper portion of the housing.
- For more detailed information, see the installation instructions supplied with the unit.
- Comply with all local regulations on electrical installations.

Commissioning

1. REV24RF../SET

- The room unit and receiver are interconnected at the factory in the RF/SET. As a result, you do not need to manually connect the two units.
  However, you can still manually connect the room unit and the receiver as needed.
  See Point "7. Manually connect REV24RF.. and RCR10/868“.

2. Switch on the REV24RF..

- Remove the black transit tabs; the unit starts to operate as soon as you remove the transit tabs on the battery contact. : Select desired language by + or -.
  Confirm by .

3. Temporarily mount the RCR10/868

- If possible, mount the receiver temporarily (e.g. using dual-sided adhesive tape) to try to identify the best possible location for RF reception. To do this, fully wire the RCR10/868 and close the front cover.
- See Point "4 Test radio link / identify best RF reception location“.

4. Test radio link / Identify best RF reception location



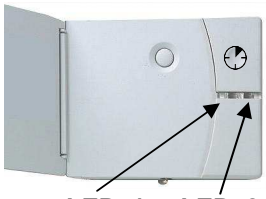

a) Switch on RCR10/868

b) Press the Test button on the rear or the REV24RF.. and place the unit in the best RF reception location. Test the radio link between the room controller and all connected receivers. On the RCR10/868, LED_2 flashes quickly.
The test turns off automatically after 10 minutes or you can manually end it by pressing one of the following buttons: , or .

c) The REV24RF.. shows the quality of the radio link to the connected RCR10/868. If more than one receiver is connected to the same REV24RF.., the display changes every 10 seconds from RCR 01 to RCR 02, etc..

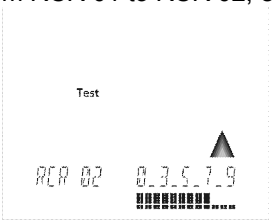

Select the receiver with + or -. The selected receiver is tested continuously for 1 minute.

d) REV24RF..: The greater the visible bar under numbers 0…9, the better the radio link. If the bar is below the number 0, radio link is not guaranteed. In this case, move the room controller to a different location and shorten the distance between the REV24RF.. and RCR10/868.
Repeat the test until quality is sufficient.



e) RCR10/868: LED_1 also indicates the radio link quality:
Red = Insufficient or no radio link
Orange = Good
Green = Very good

f) If radio link quality is insufficient, shorten the distance between the REV24RF.. and RCR10/868.
Repeat the test until quality is sufficient.

5. Finish mounting the RCR10/868

a) Switch off power.
b) Mark the place where the RCR10/868 is located.
c) Loosen the wiring as needed.
d) Mount the receiver at the marked location, wire completely and close the housing.
e) Switch on power.
f) The receiver does not require operation after commissioning.

6. RCR10/868 Manually override the relay

Press the override button on the receiver to manually override the relay. LED_1 flashes. Override is active for at least 15 minutes. Press again to remove manual override.
If the room controller sends a control telegram within these 15 minutes, the telegram is suppressed and executed only after these 15 minutes. This function allows for testing the unit connected to the receiver.
After expiration of manual override, the RCR10/868 immediately executes every control telegram received.

In the even of errors (e.g. empty batteries), the room controller no longer sends control telegrams. Press the override button on the receiver to permanently turn on the connected unit. This function allows you to e.g. run the heating system even if the room controller is off.
When the room controller resumes operation (e.g. after inserting new batteries), its control telegrams overwrite manual override. Synchronization takes max. 130 minutes.

7. Manually connect REV24RF.. and RCR10/868

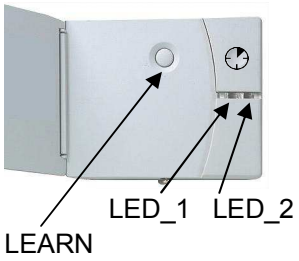

The receiver delivered with REV24RF../SET is connected to the controller at the factory.

Manually connect RCR10/868 and REV24RF.. :

a) On the RCR10/868 press the “Learn“ button for about 4 seconds: The blue LED_2 flashes slowly, learning mode is active.
b) Also press the "Learn" button within 20 minutes on the REV24RF.. : The REV24RF.. now either shows confirmation that receiver (RCR 01, RCR02, etc.) is connected or that connection failed.
Display on the RCR10/868: When connection is successful, the blue LED_2 briefly flashes quickly, and LED_1 goes from red to green. If connection failed, learning mode remains active: The blue LED_2 flashes slowly.
c) You can connect max. 15 receivers to 1 room controller. For unique identification of each receiver, the REV24RF.. assigns a number to each RCR10/868 connected. The REV then displays this number after a successful learning process.

Notes

- The error indication on the REV24RF.. can point out a radio issue to one of the connected receivers. Check the error message with .
Check the receiver as needed.
- LED_1 is red when the RCR10/868 receives a weak, garbled or no control telegram for about. 65 minutes. Check the display on the REV24RF.. for an error message.
- As long as the RCR10/868 correctly receives the control telegrams, the receiver operates normal. If a control telegram is not received correctly, the relay remains in the position last switched.
As soon as the RCR10/868 again receives a correct control telegram from the REV24RF.., the receiver resumes normal operation.
- The relay switches off, if the RCR10/868 receives no or an incorrect control telegram from the REV24RF… This switches off the controlled unit. LED_1 is red.
As soon as the RCR10/868 again receives a correct control telegram from the REV24RF.., the receiver resumes normal operation.
- In the case of power interruption at the RCR10/868, the relay goes to OFF.

This is a software class A controller designed for use at a normal degree of pollution.

Disposal



The devices are considered electronics devices for disposal in term of European Directive 2012/19/EU and may not be disposed of as domestic waste.

- Dispose of the device via the channels provided for this purpose
- Comply with all local and currently applicable laws and regulations.
- Dispose of empty batteries at designated collection points.

Technical data for room controller REV24RF..

General unit data	Power	DC 3 V
	Batteries (alkaline AA)	2 x 1,5 V
	Life	Ca. 2 years
	Backup of clock when changing battery (all other data remain in EEPROM)	Max. 1 min
	Protection class	II as per EN 60 730-1
	Sensing element	NTC 10 kΩ ±1 % at 25 °C
	Measuring range	0…50 °C
	Time constant	Max. 10 min
	Setpoint setting ranges	
	All temperature settings	3…35 °C
	Resolution for settings and displays	
	Setpoints	0.2 °C
	Switching times	10 min
	Actual value measurement	0.1 °C
	Actual value display	0.2 °C
	Time display	1 min
Standards	EU Conformity (CE)	CE1T22061X1 *)
Product safety	Degree of protection	IP20
Environmental conditions	Operation	
	Climatic conditions	3K3 as per IEC 60 721-3-3
	Temperature	5...40 °C
	Humidity	< 85 % r.h.
	Storage and transport	
	Climatic conditions	2K3 as per IEC 60 721-3-2
	Temperature	-25...+70 °C
	Humidity	< 93 % r.h.
	Mechanical conditions	2M2 as per IEC 60 721-3-2
Weight	Without packaging	
	REV24RF..	0.29 kg
	REV24RF../SET	0.45 kg
Color	Housing	RAL9003 signal white
	Base	RAL7038 gray
Size	Housing with base	94 x 134.5 x 30 mm

*) The documents can be downloaded from http://siemens.com/bt/download.

Technical data for receiver RCR10/868

General unit data	Operating voltage	AC 230 V +10/−15 %
	Power	< 10 VA
	Frequency	45 – 65 Hz
	Switching capacity of relay	
	Voltage	AC 24…250 V
	Current	0.2…16 (2) A
	Protection class	II as per EN 60 730-1
Standards	EU Conformity (CE)	CE1T22061X1 *)
Product safety	Degree of protection	IP20
Environmental conditions	Operation	
	Climatic conditions	Class 3K3 as per IEC 60 721-3-3
	Temperature	0...+45 °C
	Humidity	<85 % r.h.
	Storage and transport	
	Climatic conditions	Class 2K3 as per IEC 60 721-3-2
	Temperature	−25...+70 °C
	Humidity	<93 % r.h.
	Mechanical conditions	Class 2M2 as per IEC 60 721-3-2
Weight	Without packaging	
	RCR10/868	0.16 kg
	REV24RF../SET	0.45 kg
Color	Housing front	RAL 9003 signal white
	Housing bottom	RAL 7038 gray
Size	Housing with base	88 x 114 x 31.5 mm

*) The documents can be downloaded from http://siemens.com/bt/download.

Connection diagram fro receiver RCR10/868:

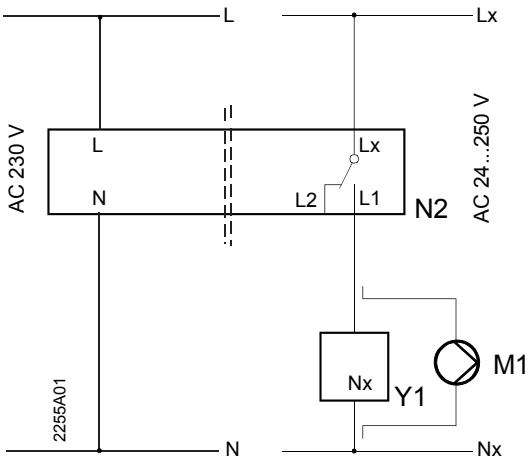

L	Phase, AC 230 V
N	Neutral conductor AC 230 V
Lx	Phase, AC 24...250 V
L1	N.O. contact, AC 24 ….250 V / 16 (2) A
L2	N.C. contact, AC 24 … .250 V / 16 (2) A
M1	Circulating pump
N2	Receiver RCR10/868
Y1	Actuating device

Application examples

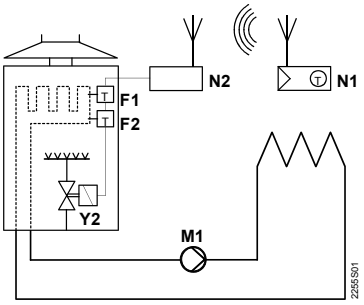

Instantaneous water heater

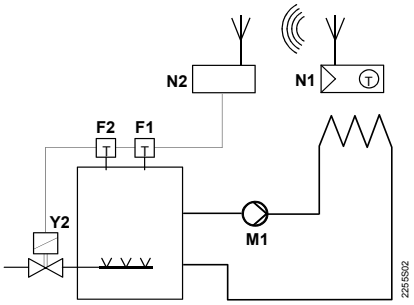

Atmospheric gas burner

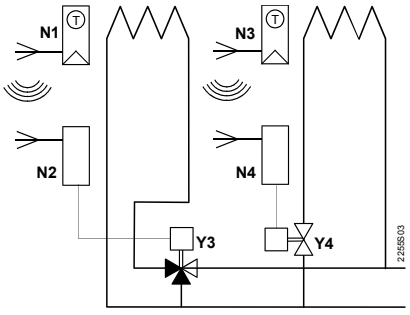

Zone valve

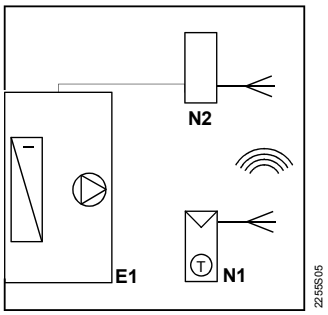

Cooling unit

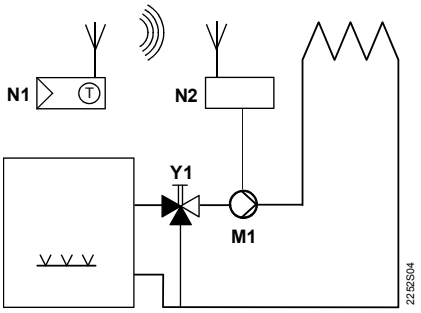

Circulating pump with precontrol by manual mixing valve

E1 Cooling unit
F1 Thermal reset limit thermostat
F2 Manual reset safety limit thermostat
M1 Circulating pump
N1 Room temperature controller (transmitter) REV24RF..
N2 Receiver RCR10/868
N3 Room temperature controller (transmitter) REV24RF..
N4 Receiver RCR10/868
Y1 3-port valve with manual adjustment
Y2 Magnetic valve
Y3 Three-port valve with actuator
Y4 Two-port valve with actuator

Dimensions

Room temperature controller (transmitter) REV24RF..

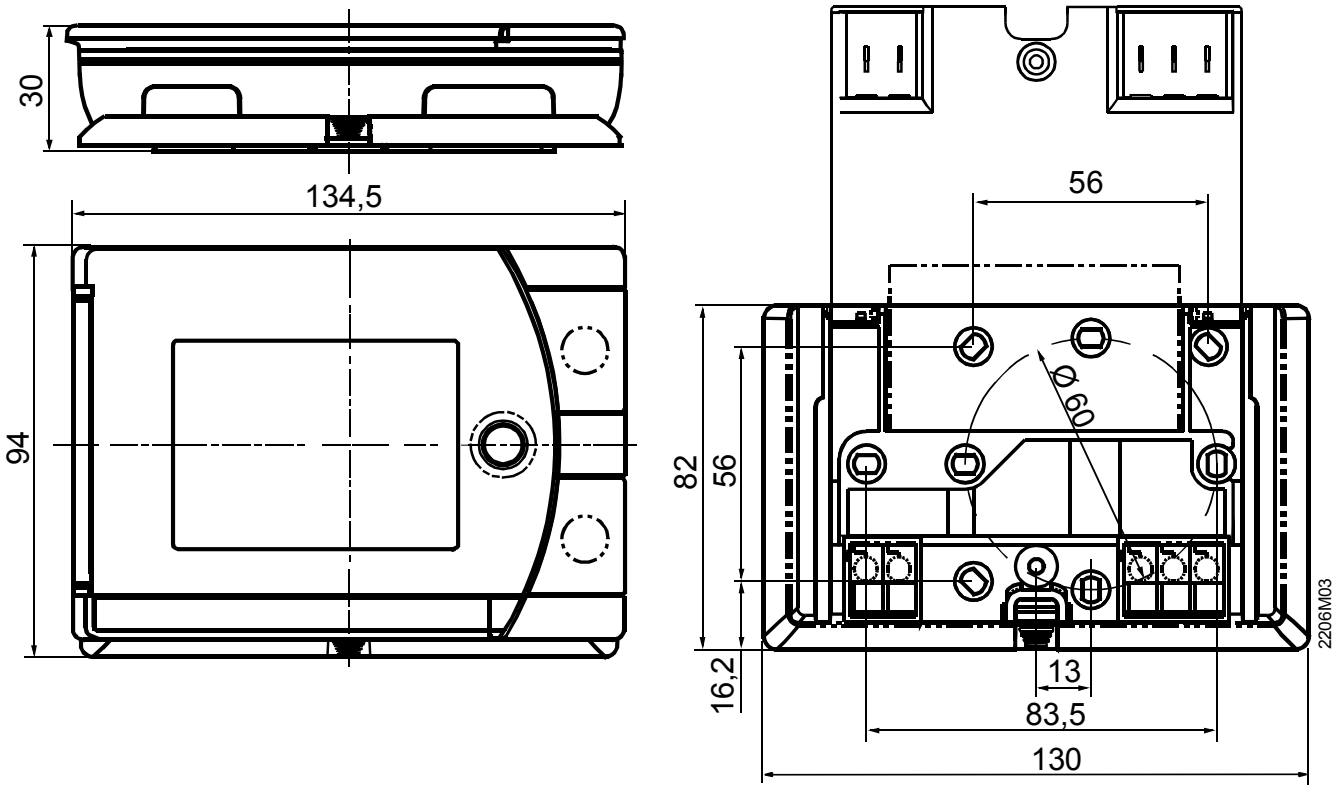

Receiver RCR10/868

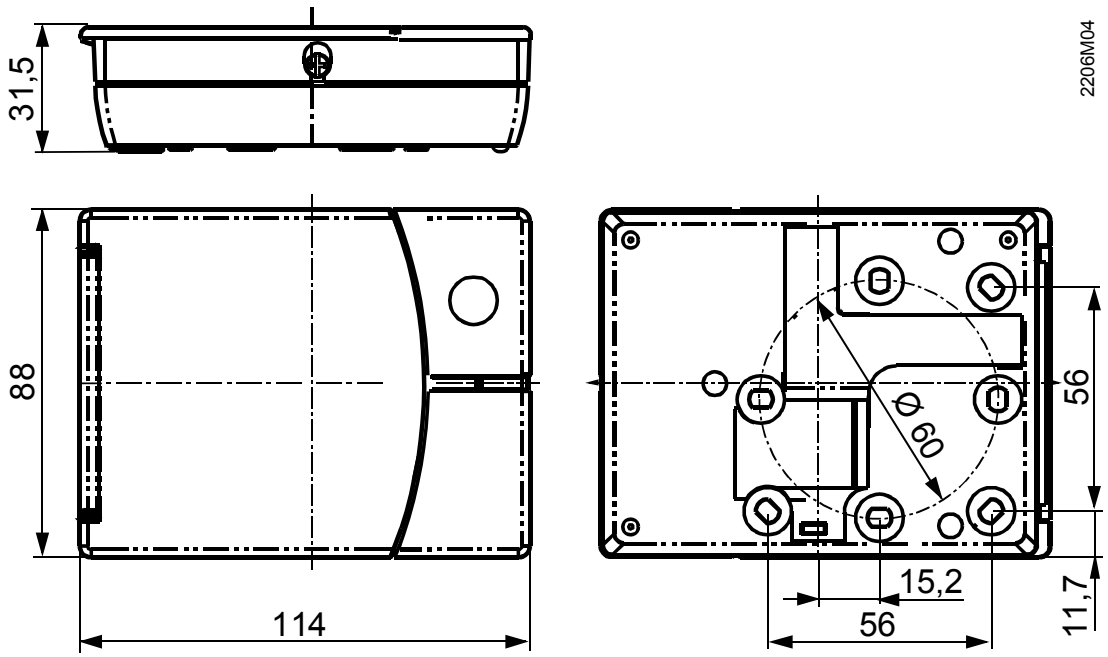

©2008-2014 Siemens Switzerland Ltd