SIEMENS

5146

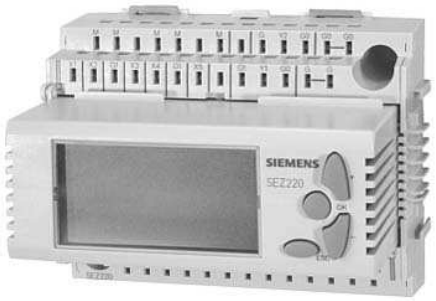

Synco™ 200

Signal Converter SEZ220

- **With preprogrammed standard applications**
- **Freely programmable**
- **Menu-driven operation**

Use

The signal converter is for use in HVAC plant to

- provide minimum / maximum selection or averaging of up to 5 passive or active input signals
- calculate enthalpy, enthalpy differentials, absolute humidity or dew points from passive temperature and active humidity signals
- convert 1 passive input signal into 2 active signals
- double signals for the sequential control of pumps, valves and fans

Functions

Universal inputs

Universal inputs for 5 passive or active analog input signals of various measured values (°C, %, ---).

Function modes

- Minimum / maximum / average (MIN-MAX-AVR)
  - Selection of maximum input signal from the inputs IN 1 – IN 5
  - Selection of minimum input signal from the inputs IN 1 – IN 5
  - Calculation of average value of the inputs IN 1 – IN 5
  - For calculating the average value, input IN1 can be weighted. This means that, for making the calculation, the number of input signals can be increased several times over

  If, in addition, configuration parameter SPLIT is activated, the functions will be assigned to the inputs X1 – X2 and X3 – X5. This means, e.g.:
  - Selection of maximum input signal from the inputs IN 1 – IN 2
  - Selection of maximum input signal from the inputs IN 3 – IN 5
  - Selection of minimum input signal from the inputs IN 1 – IN 2
  - Selection of minimum input signal from the inputs IN 3 – IN 5
  - Calculation of average value of the inputs IN 1 – IN 2
  - Calculation of average value of the inputs IN 3 – IN 5
- Enthalpy processor (ENTHALPY)
  - Calculation of enthalpy from 1 passive temperature signal and 1 active humidity signal
  - Calculation of absolute humidity from 1 passive temperature signal and 1 active humidity signal
  - Calculation of enthalpy differential from 2 signal groups each delivering 1 passive temperature signal and 1 active humidity signal
  - Calculation of dew point temperature from 1 passive temperature signal and 1 active humidity signal
- Signal doubling / signal inversion (2X-INV)
  - Signal doubling for the sequential control of pumps, valves and fans
  - Signal conversion from 1 passive temperature signal into 2 active temperature signals

The functions can be combined as required by the application.

Ordering

When ordering, please give name and type reference.
The poducts listed under "Accessories" must be ordered as separate items.

Product documentation

Document type	*Document number*
Basic Documentation	**CE1P5146en**
Instructions set (mounting, commissioning, operation)	**74 319 0425 0**
Declaration of Conformity (CE)	**CE1T5146xx**
Environmental Declaration	**CE1E5146en**

Technical design

The signal converter has 13 applications ready programmed. When commissioning a plant, the relevant basic type must be entered. All associated functions, terminal assignments, settings and displays will then automatically be activated, and parameters not required will be deactivated.
In addition, 1 empty application (basic type M) is loaded.

- With the help of the built-in operation or the OCI700.1 service tool, the signal converter offers the following choices:
- Activation of a preprogrammed application (refer to "Preprogrammed standard application")
- Modification of a preprogrammed application
- Free configuration of applications

For operating actions of the functions, refer to the Basic Documentation.

Mechanical design

The signal converter consists of terminal base and insert with built-in operation.
The terminal base can be fitted to a DIN mounting rail or is screwed directly on a flat surface. It consists of a plastic housing with 2 terminal levels.
The insert engages in the terminal base. It consists of a plastic housing which accommodates the printed circuit boards.
Controller operation is fully integrated.

Operating, display and connecting elements

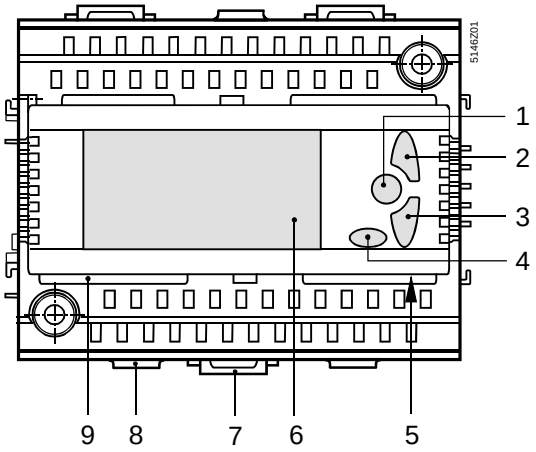

Legend

1 OK button for confirming the selected menu line or the value entered
2 Navigation button, upward (+) for selecting the menu line or changing the value
3 Navigation button, downward (–) for selecting the menu line or changing the value
4 ESC button for returning to the previous menu or rejecting the value entered
5 Connection facility for the service tool (RJ45 connector)
6 Display
7 Catch for fitting the signal converter to a top hat rail
8 Fixing facility for a cable tie (cable strain relief)
9 Rest for the terminal cover

Accessories

Name	*Type reference*
Mounting frame for flush panel mounting (consisting of 1 small frame, 1 large frame, 2 hexagonal spacers, 4 fixing screws, Mounting Instructions)	**ARG62.201**

Engineering notes



- The signal converter operates on AC 24 V. Operating voltage must conform to the requirements of SELV/PELV (safety extra low-voltage)
- The transformers used must be safety isolating transformers featuring double insulation to EN 60 742 or EN 61 558-2-6; they must be suited for 100 % duty
- Fuses, switches, wiring and earthing must be in compliance with local regulations
- Sensor wires should not be run parallel to mains carrying wires that power fans, actuators, pumps, etc.
- It is recommended to use the standard applications provided (refer to "Preprogrammed standard applications"). Specific plant situations may require certain adaptations however

Mounting and installation notes

- The signal converter is designed for:
  - Mounting in a standard cabinet to DIN 43 880
  - Wall mounting on an existing top hat rail (to EN 50 022-35x7.5)
  - Wall mounting using 2 fixing screws
  - Flush panel mounting with ARG62.201 mounting frame
- Not permitted are wet or damp spaces. The permissible environmental conditions must be observed
- Disconnected the system from power supply prior to mounting the signal converter
- **The insert may not be removed from the terminal base!**
- Each terminal (spring cage terminal) can accommodate only 1 solid wire or 1 stranded wire. For making the connections, the cables must be stripped for 7 to 8 mm. To introduce the cables into the spring cage terminals and to remove them, a screwdriver size 1 is required. Cable strain relief can be provided with the help of the fixing facility for cable ties
- The signal converter is supplied complete with Installation Instructions and Operating Instructions

Commissioning notes

- The configuration and parameters of the standard applications offered by the controller can be changed any time by service staff who have been trained by HVAC Products and who have the required access rights, either locally or online/offline with the service tool
- During the commissioning process, the application is deactivated and the outputs are in a defined off state
- On completion of the configuration, the signal converter automatically makes a new start
- When leaving the commissioning pages, the peripheral devices connected to the universal inputs are automatically tested and identified. If a peripheral device is missing, a fault status message will be delivered
- If adaptations to specific plants are required, they must be recorded and the documentation kept inside the control panel
- For the procedure to be followed when starting up the plant for the first time, refer to the Installation Instructions

Disposal notes



The device is classified as waste electronic equipment in terms of the European Directive 2002/96/EC (WEEE) and should not be disposed of as unsorted municipal waste. The relevant national legal rules are to be adhered to. Regarding disposal, use the systems setup for collecting electronic waste.
Observe all local and applicable laws.

Technical data

Power supply (G, G0)	Rated voltage	AC 24 V ±20 %
	Safety extra low-voltage (SELV) / protective extra low-voltage (PELV) to	HD 384
	Requirements for external safety isolating transformer to	EN 60 742 / EN 61 558-2-6, min. 10 VA, max. 320 VA
	Frequency	50/60 Hz
	Power consumption	5 VA
	Supply line fusing	max. 10 A
Universal inputs Measured value inputs (X1...X5)	Number	5
	Signal sources	
	Passive	LG-Ni 1000, T1, Pt 1000, 0...1000 Ω 2x LG-Ni 1000 (averaging)
	Acteiv	DC 0...10 V
Outputs Positioning outputs (Y...)	Number	2
	Output voltage	DC 0...10 V
	Output current	±1 mA
	Max. load	continuous short-circuit
Power supply external devices (G1)	Voltage	AC 24 V
	Current	max. 4 A
Interfaces	Service tool connection facility	RJ45 connector
Perm. cable lengths	For passive measuring and positioning signals	(measuring errors can be corrected)
	Type of signal	
	LG-Ni 1000, T1	max. 300 m
	Pt 1000	max. 300 m
	0...1000 Ω	max. 300 m
	For DC 0...10 V measuring and control signals	refer to Data Sheet of the signal delivering device
Electrical connections	Connection terminals	spring cage terminals
	For wires	0.6 mm dia....2.5 mm^2
	For stranded wires without ferrules	0.25...2.5 mm^2
	For stranded wires with ferrules	0.25...1.5 mm^2
Degrees of protection	Degree of protection of housing to IEC 60 529	IP 20 (when mounted)
	Safety class to EN 60 730	device suited for use with equipment of safety class II

Environmental conditions

Operation to	IEC 60 721-3-3
Climatic conditions	class 3K5
Temperature (housing and electronics)	0...50 °C
Humidity	5...95 % r.h. (non-condensing)
Mechanical conditions	class 3M2
Transport to	IEC 60 721-3-2
Climatic conditions	class 2K3
Temperature	−25...+70 °C
Humidity	< 95 % r.h.
Mechanical conditions	class 2M2

Classifications to EN 60 730

Mode of operation, automatic controls	type 1B
Degree of contamination, controls' environment	2
Software class	A
Rated surge voltage	4000 V
Temperature for ball-pressure test of housing	125 °C

Materials and colors

Terminal base	Polycarbonate, RAL 7035 (light-grey)
Controller insert	Polycarbonate, RAL 7035 (light-grey)
Packaging	corrugated cardboard

Standards

CE-conformity	
EMC directive	2004/108/EC
Electromagnetic compatibility for industrial and domestic sector	
Immunity	EN 60730-1
Emissions	EN 60730-1
UL approvals	UL916 (Energy Management Equipment)

Environmental compatibility

The product environmental declaration CE1E5146en contains data on environmentally compatible product design and assessments (RoHS compliance, materials composition, packaging, environmental benefit, disposal)	ISO 14001 (Environment) ISO 9001 (Quality) RL 2002/95/EC (RoHS)

Weight

Excl. packaging	0.293 kg

Connection diagrams

Internal diagram

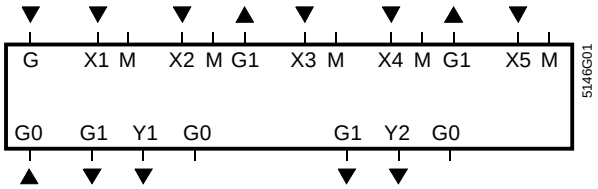

G, G0	Rated voltage AC 24 V
G1	Output voltage AC 24 V for powering external active sensors
M	Measuring neutral for signal input
G0	System neutral for signal output
X...	Universal signal inputs (analog signals only) for LG-Ni 1000, 2x LG-Ni 1000 (averaging), T1, Pt 1000, DC 0...10 V, 0...1000 Ω
Y...	Control or status outputs, analog DC 0...10 V

Note

Each terminal (spring cage terminal) can only accommodate 1 solid wire or 1 stranded wire. Double terminals are internally interconnected.

Connection diagrams

Connection of 2 passive sensors on the input side (averaging)

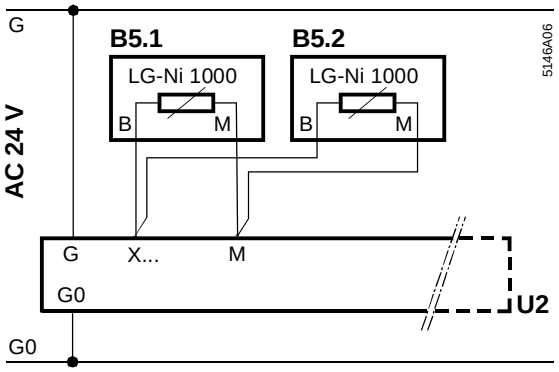

U2	Signal converter SEZ220
B5...	Room temperature sensor QAA24

For other connections on the input and output side, refer to " Preprogrammed standard applications ".

Dimensions

SEZ220

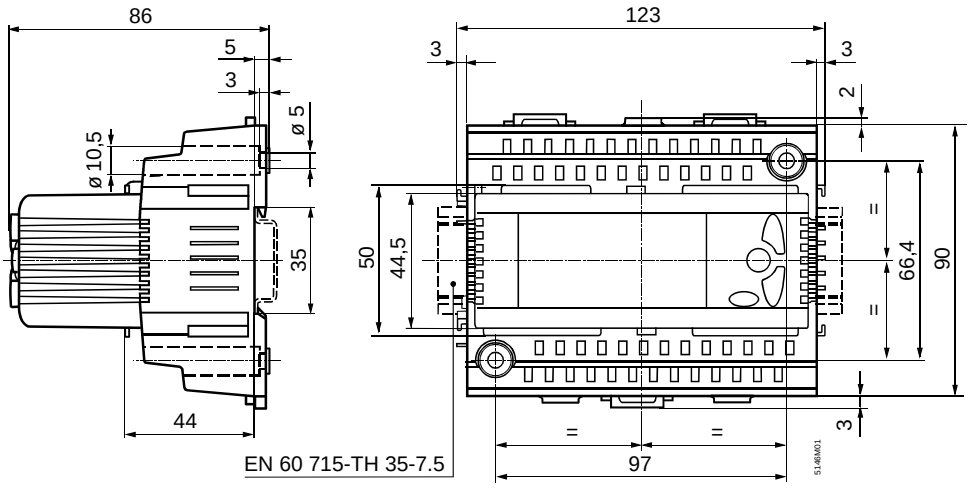

ARG62.201 Mounting frame

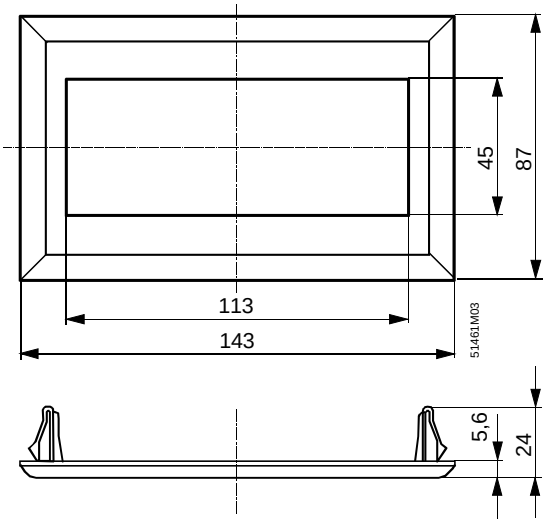

Panel cutout if controller shall be wired prior to mounting:

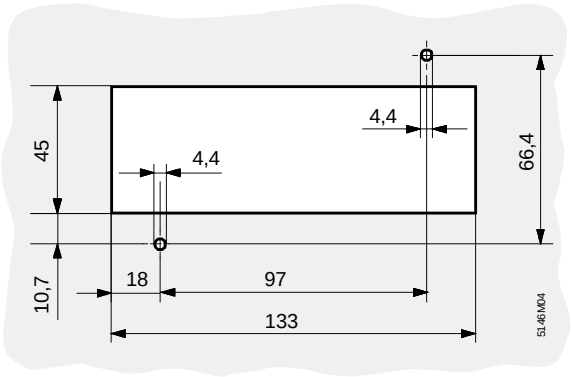

Panel cutout if controller shall be wired after mounting:

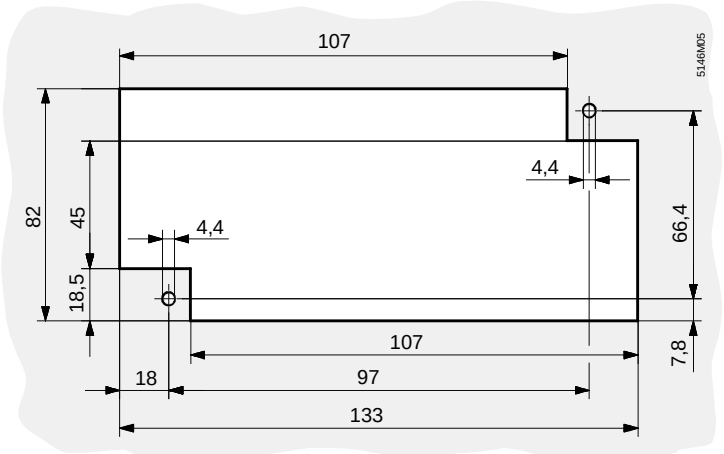

Dimensions in mm

Notes The connection diagrams assigned to the basic types are only examples.

Basic type	*Description*	*Connection diagram*
M01	Selection of minimum and maximum input signal from all present passive input signals	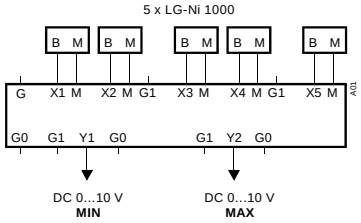
M02	Selection of maximum input signal and calculation of average of all present passive input signals	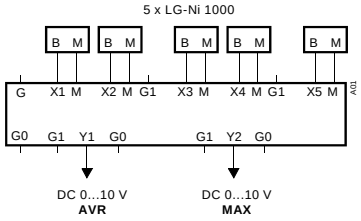
M03	Selection of maximum input signal and calculation of average of all present active input signals	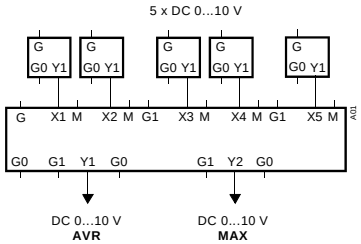
M04	Selection of minimum input signal from 2 active input signals and 3 passive input signals	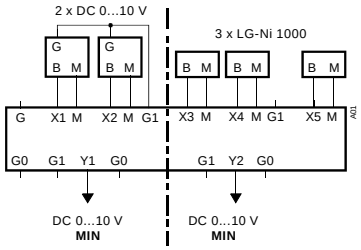
M05	Calculation of average of 2 active input signals and 3 passive input signals	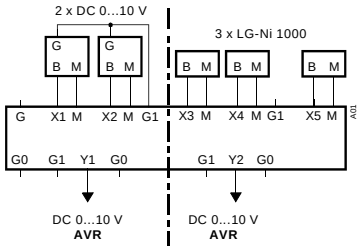
M06	Selection of maximum input signals from 2 active input signals and 3 passive input signals	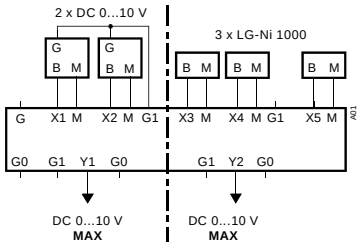

Basic type	*Description*	*Connection diagram*
E01	Calculation of enthalpy from 1 passive temperature signal and 1 active humidity signal	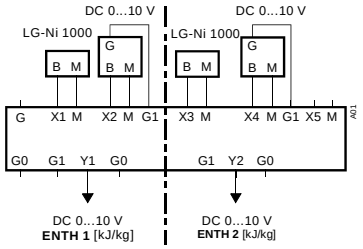
E02	Calculation of enthalpy differential from 2 signal groups each with 1 passive temperature signal and 1 active humidity signal	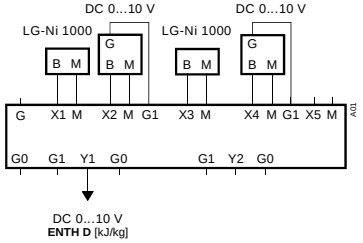
E03	Calculation of absolute humidity and enthalpy from 1 passive temperature signal and 1 active humidity signal	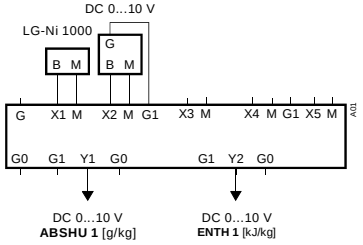
E04	Calculation of absolute humidity from 1 passive temperature signal and 1 active humidity signal	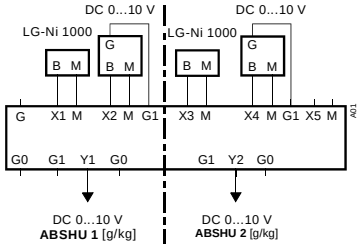
E05	Calculation of dew point from 1 passive temperature signal and 1 active humidity signal	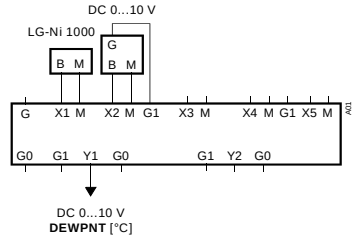
D01	Doubling of signal for sequential control of pumps, valves and fans	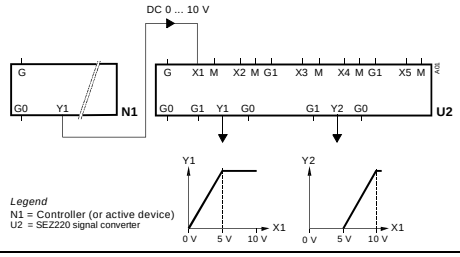
D02	Signal conversion from 1 passive temperature signal into 2 active signals	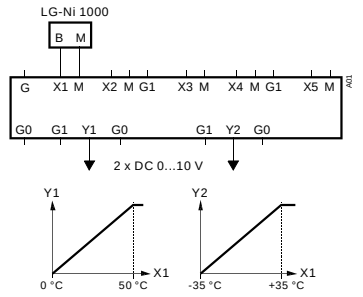

© 2004-2008 Siemens Switzerland Ltd.

Subject to change