Компактная пневмокаретка короткого хода MXS

Высокая жесткость, высокая точность

Плавные движения благодаря роликовым направляющим

Средства, облегчающие монтаж

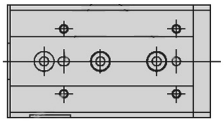

Отверстия для позиционирования облегчают повторный монтаж

Возможна установка датчиков положения

Датчики положения полностью утапливаются в корпусе каретки

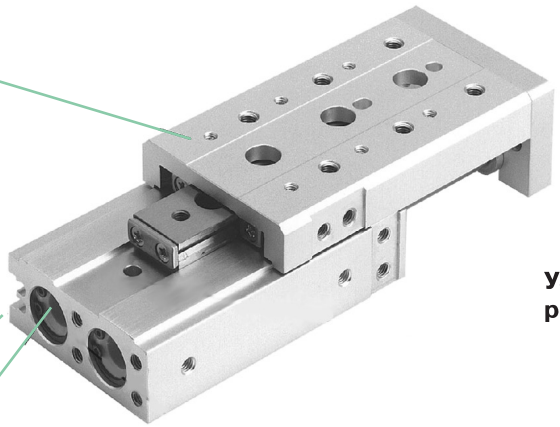

Узел регулировки хода

Может быть оснащена унифицированным узлом ограничения хода 0-5 мм

Компактная и легкая

Благодаря двухпоршневому приводу усилие в два раза больше, чем усилие на стандартном цилиндре

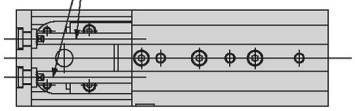

Отверстия для позиционирования

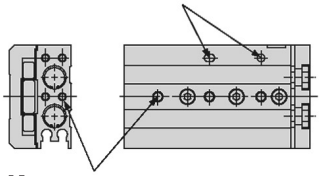

Крепежные отверстия (резьба)

Варианты монтажа пневмокаретки

1) крепление снизу	2) крепление сверху	3) осевое крепление
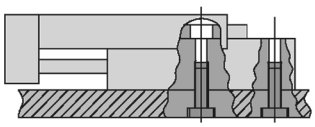	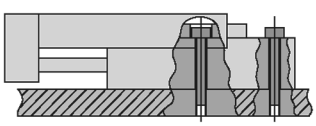	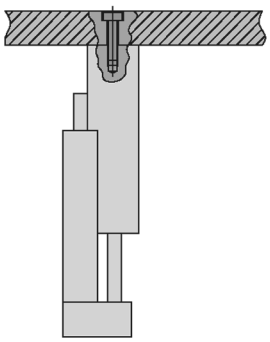

Компания SMC сохраняет за собой право на внесение технических и размерных изменений

Компактная пневмокаретка короткого хода

MXS

ø6~25

Технические характеристики

Диаметр поршня (мм)	6	8	12	16	20	25
Присоединительная резьба	M3	M5			G1/8	
Среда	Очищенный сжат. воздух с содержанием* или без содерж. масла					
Принцип действия	Двустороннего действия					
Диапазон рабочих давлений (МПа)	0.15 ~ 0.7					
Испытательное давление (МПа)	1.05					
Температура окружающей и рабочей среды (°C)	-10 ~ +60					
Скорость поршня (мм/с)	50 ~ 500					

* Рекомендуемый тип масла: ISO VG32 класс 1

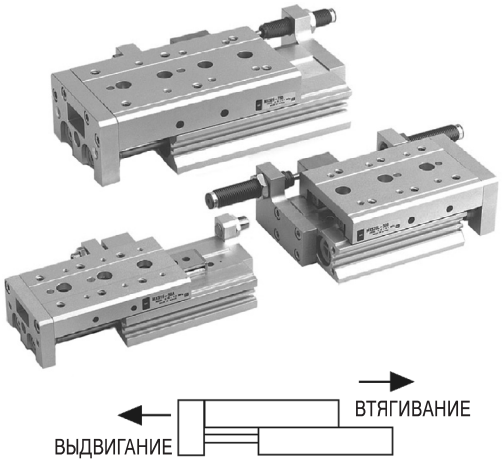

Теоретическое усилие на каретке (Н)

ø поршня (мм)	ø поршневого штока (мм)	Направление движения	Эффектив. площадь поршня (мм²)	Рабочее давление (МПа)					
				0.2	0.3	0.4	0.5	0.6	0.7
6	3	Выдвигание	57	11	17	23	29	34	40
		Втягивание	42	8	13	17	21	25	29
8	4	Выдвигание	101	20	30	40	51	61	71
		Втягивание	75	15	23	30	38	45	53
12	6	Выдвигание	226	45	68	90	113	136	158
		Втягивание	170	34	51	68	85	102	119
16	8	Выдвигание	402	80	121	161	201	241	281
		Втягивание	302	60	91	121	151	181	211
20	10	Выдвигание	628	125	188	251	314	377	440
		Втягивание	471	94	141	188	236	283	330
25	12	Выдвигание	982	196	295	393	491	590	687
		Втягивание	756	151	227	302	378	454	529

Вес (г)

Тип	Стандартная длина хода (мм)							
	10	20	30	50	75	100	125	150
MXS6	95	110	130	230	–	–	–	–
MXS8	–	175	215	295	465	–	–	–
MXS12	–	–	380	530	730	980	–	–
MXS16	–	–	700	850	1200	1450	1800	–
EMXS20	–	–	1100	1400	1800	2300	2900	3400
EMXS25	–	–	1950	2350	2950	3550	4450	5150

Датчики положения

Подробную информацию см. на стр. 2-220

Герконовый датчик

	светодиод	Напряжение	Ток
D-A90L		24/48/110VAC	50/40/20 мА
D-A93L	●	24VDC/110VAC	5~40 мА

Электронный датчик

	светодиод	Напряжение	Ток
D-M9BL (2 провода)	●	24 VDC	< 30 мА
D-M9PL (PNP-структ.)	●	24 VDC	< 50 мА

Критерии выбора / допустимые боковая нагрузка и прогиб

Продольная нагрузка

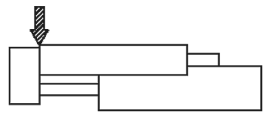

Поперечная нагрузка

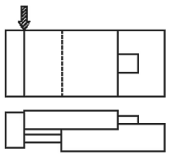

Смещенная нагрузка

Отклонение от точки A,
если нагрузка направлена по F

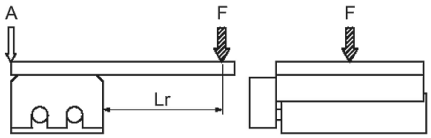

ø6

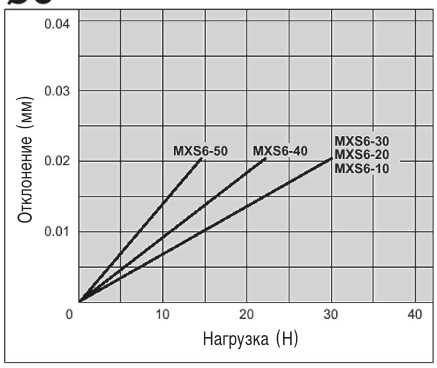

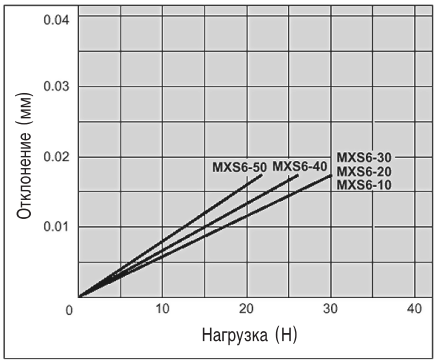

Lr=24 мм

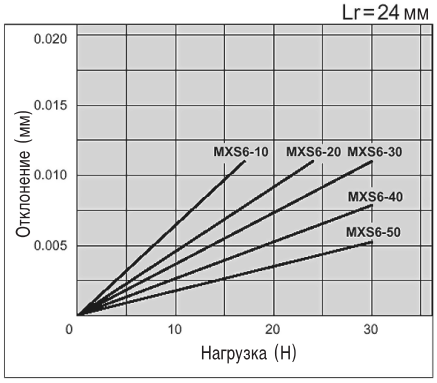

ø8

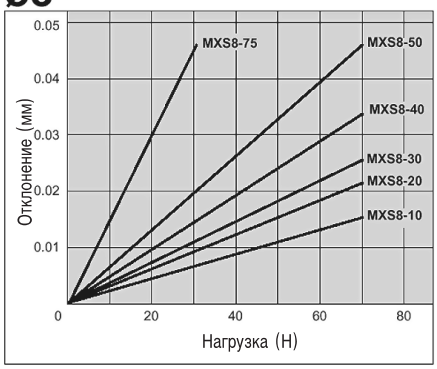

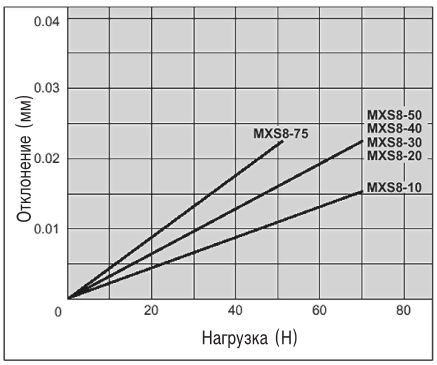

Lr=50 мм

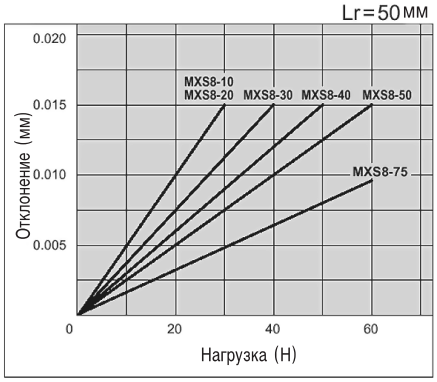

ø12

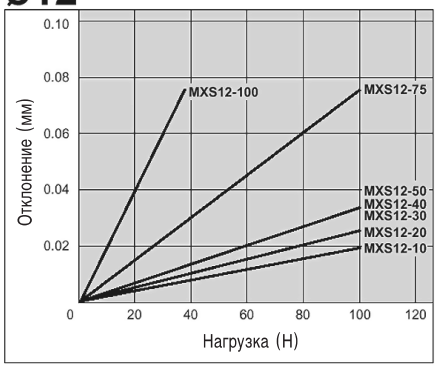

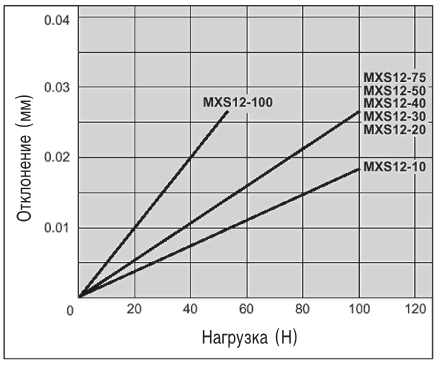

Lr=65 мм

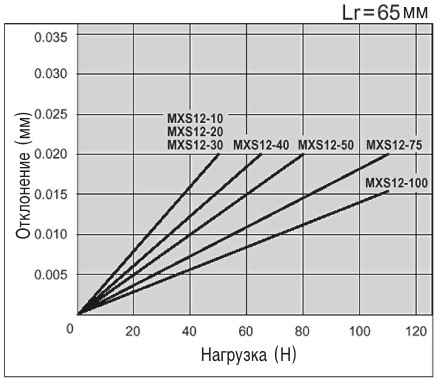

Компания SMC сохраняет за собой право на внесение технических и размерных изменений

Критерии выбора / допустимые боковая нагрузка и прогиб

Продольная нагрузка

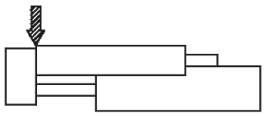

Поперечная нагрузка

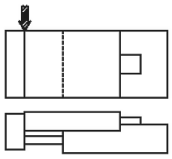

Смещенная нагрузка

Отклонение от точки A,
если нагрузка направлена по F

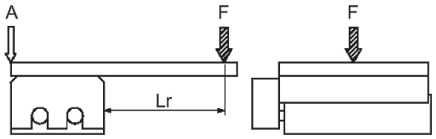

ø16

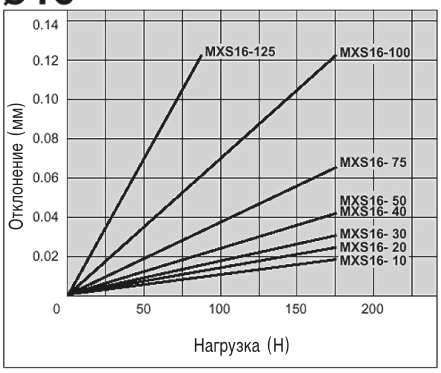

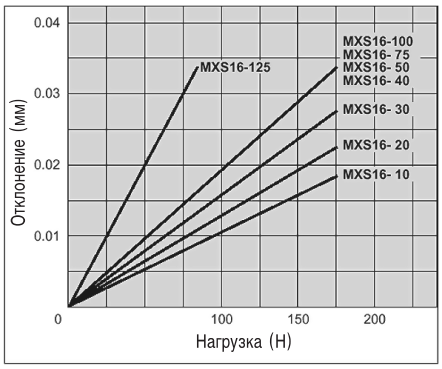

Lr=89 мм

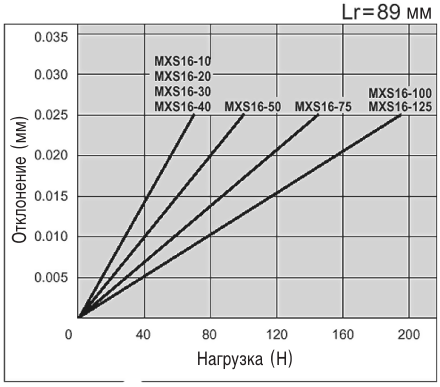

ø20

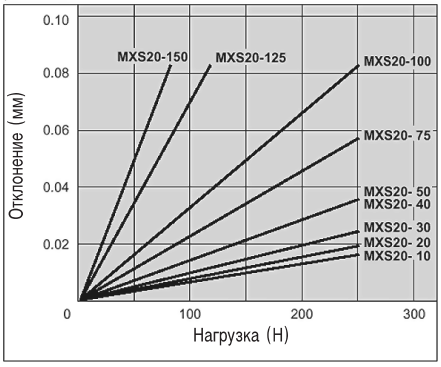

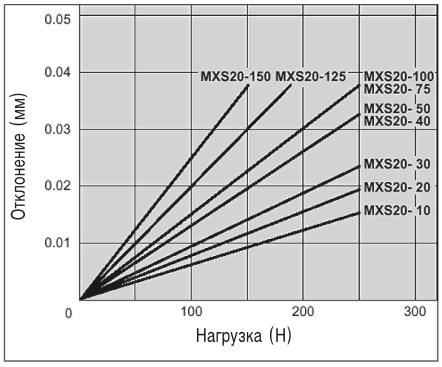

Lr=122 мм

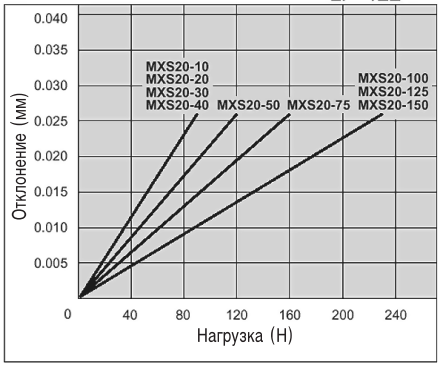

ø25

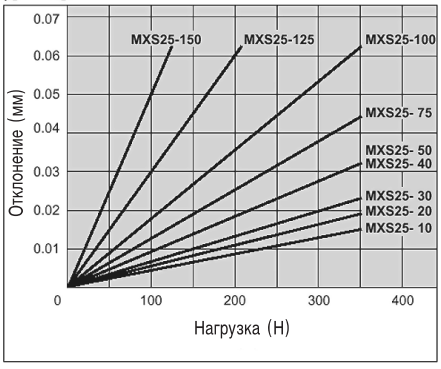

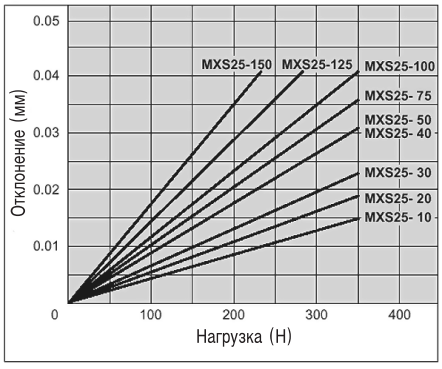

Lr=154 мм

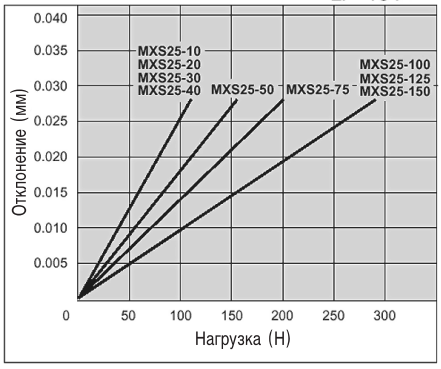

Динамическая нагрузка не должна превышать 1/10 допустимой статической нагрузки (сила инерции масс, скорость).

Критерии выбора

Расчет допустимой статической нагрузки Fp, Fy и Fr

Продольная нагрузка

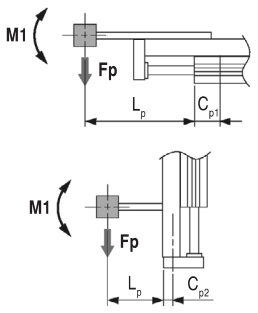

$$F_p = \frac{M1 \times 100}{L_p + C_p} (H)$$

Поперечная нагрузка

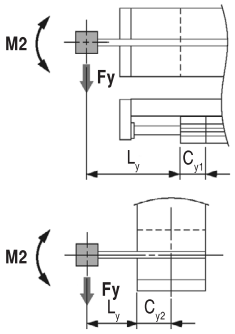

$$F_y = \frac{M2 \times 100}{L_y + C_y} (H)$$

Смещеная нагрузка

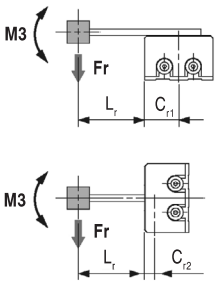

$$F_r = \frac{M3 \times 100}{L_r + C_r} (H)$$

L_p, L_y, L_r - расстояние между монтажной плоскостью и центром тяжести нагрузки (мм)

C_p, C_y, C_r - поправочный коэффициент на расстояние от центра тяжести нагрузки (мм)

Меры предосторожности

1. Если цилиндр работает с недопустимо высокими моментами, вследствии несбалансированной нагрузки на направляющую происходит увеличение зазора. Вместе с этим сокращается срок службы каретки.
2. Слишком высокая скорость поршня приводит к ударам, воздействующим на направляющую,что также сокращает срок службы.

Максимально допустимый момент

Ход (мм) / ø поршня (мм)	Допустимый момент для: M1, M2, M3 (Нм)								Расстояние от центра тяжести нагрузки (мм)					
	10	20	30	50	75	100	125	150	Cp1	Cp2	Cy1	Cy2	Cr1	Cr2
6	0.70	0.98	1.22	1.22	–	–	–	–	11	6	13	16	16	6
8	–	2.06	2.78	4.17	4.17	–	–	–	11	7.5	13	20	20	7.5
12	–	–	4.26	7.11	9.95	9.95	–	–	24	8.5	26	25	25	8.5
16	–	–	8.33	11.42	17.13	22.84	22.84	–	27	10	30	31	31	10
20	–	–	13.79	19.31	24.83	35.87	35.87	35.87	34	14.5	36	38	38	14.5
25	–	–	21.73	30.42	39.11	47.80	47.80	47.80	42	19	44	46	46	19

Конструкция

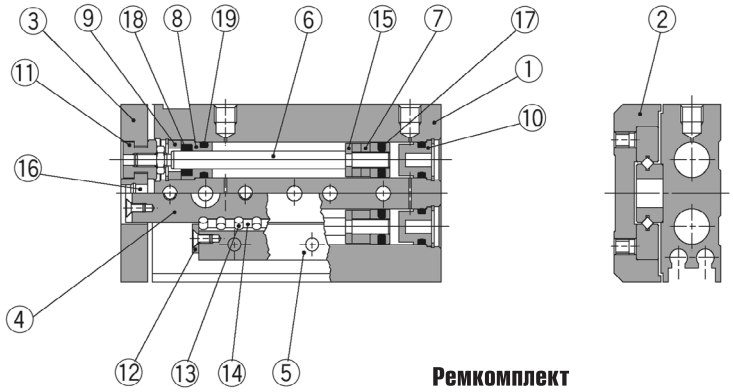

Ремкомплект

Комплекты уплотнений, состоящие из поз. 17, 18,19

Тип	Номер для заказа
MXS6	**MXS6-PS**
MXS8	**MXS8-PS**
MXS12	**MXS12-PS**
MXS16	**MXS16-PS**
EMXS20	**MXS20-PS**
EMXS25	**MXS25-PS**

Спецификация

Поз.	Обозначение	Материал
1	Корпус	Алюм. сплав (тверд. алитирование)
2	Стол	
3	Концевой фланец	
4	Шина	Сталь
5	Направляющая	
6	Поршневой шток	Нерж. сталь
7	Поршень	
8	Зажим уплотнения	Латунь
9	Крышка	Пластмасса
10	Компенсаторная гайка	Нерж. сталь
11	Соединительный канал	Латунь (никелиров.)
12	Роликовый стопор	Нерж. сталь
13	Ролики	Подшип. сталь
14	Сепаратор	Пластмасса
15	Демпферная шайба	Полиуретан
16	Концевой демпфер	Полиуретан
17	Уплотнение поршня	NBR
18	Уплотнен. поршн. штока	
19	Кольцевая прокладка круглого профиля	

Компания SMC сохраняет за собой право на внесение технических и размерных изменений

Компактная пневмокаретка короткого хода
MXS

Номер для заказа

Пневмокаретка

EMXS **12** – **50**

- для ⌀20 и ⌀25
- длина хода (мм): 10 | 20 | 30 | 50 | 75 | 100 | 125 | 150
- ⌀ поршня (мм)/(стандартный ход)

6	10, 20, 30, 50
8	20, 30, 50, 75
12	30, 50, 75, 100
16	30, 50, 75, 100, 125
20	30, 50, 75, 100, 125, 150
25	30, 50, 75, 100, 125, 150

Принадлежности (заказываются отдельно)

Узел ограничения хода

MXS–A **S** **12** – **X11**

- Выдвижение: S; Втягивание: T
- ⌀ поршня (мм): 6, 8, 12, 16, 20, 25
- диапазон регулировки (мм)

–	0~5
X11	0~15
X12*	0~25

* не для MXS6

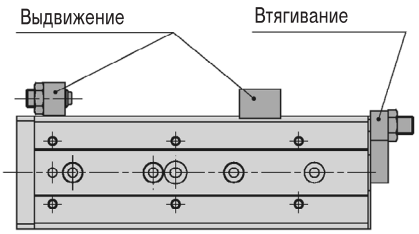

Узел ограничения хода с амортизатором

MXS–B **S** **12**

- Выдвижение: S; Втягивание: T
- ⌀ поршня (мм): 6, 8, 12, 16, 20, 25

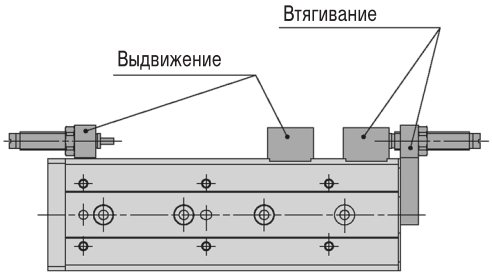

Амортизатор

Номер для заказа	RB0805	RB0806	RB1007	RB1411	RB1412
Тип каретки	MXS8	MXS12	MXS16	EMXS20	EMXS25
Макс. поглощение энергии на ход (Нм=Дж)	0.98	2.94	5.88	14.7	19.6
Ход (мм)	5	6	7	11	12
Макс. скорость столкновения (мм/сек)	50 ~ 500				
Число допустимых двойных ходов в мин. (n)	80	80	70	45	45
Макс. допустимая нагрузка (Н)	245	245	422	814	814
Диапазон рабочих температур (°C)	-10 ~ +60				
Усилие на сжатой пружине (Н)	1.96	1.96	4.22	6.86	6.86
Усилие на растянутой пружине (Н)	3.83	4.22	6.86	15.80	15.98
Вес (г)	15	15	25	65	65

Размеры

MXS6

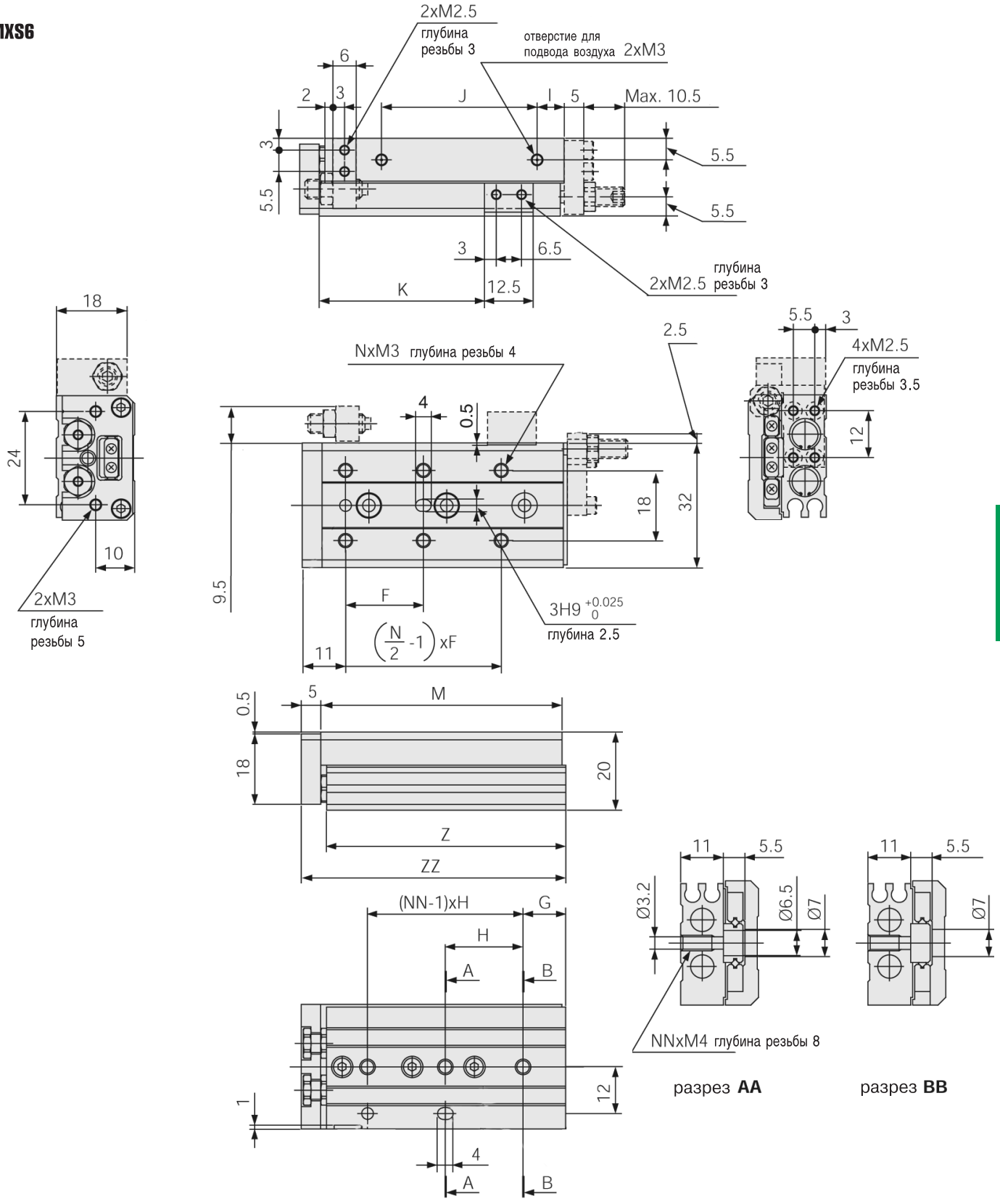

	F	N	G	H	NN	GA	HA	I	J	K	M	Z	ZZ
MXS6-10	20	4	6	25	2	11	20	10	17	22.5	42	41.5	48
MXS6-20	30	4	6	35	2	21	20	10	27	32.5	52	51.5	58
MXS6-30	20	6	11	20	3	31	20	7	40	42.5	62	61.5	68
MXS6-40	28	6	13	30	3	43	30	19	50	52.5	84	83.5	90
MXS6-50	38	6	17	24	4	41	48	25	60	62.5	100	99.5	106

Компания SMC сохраняет за собой право на внесение технических и размерных изменений

Размеры

MXS8

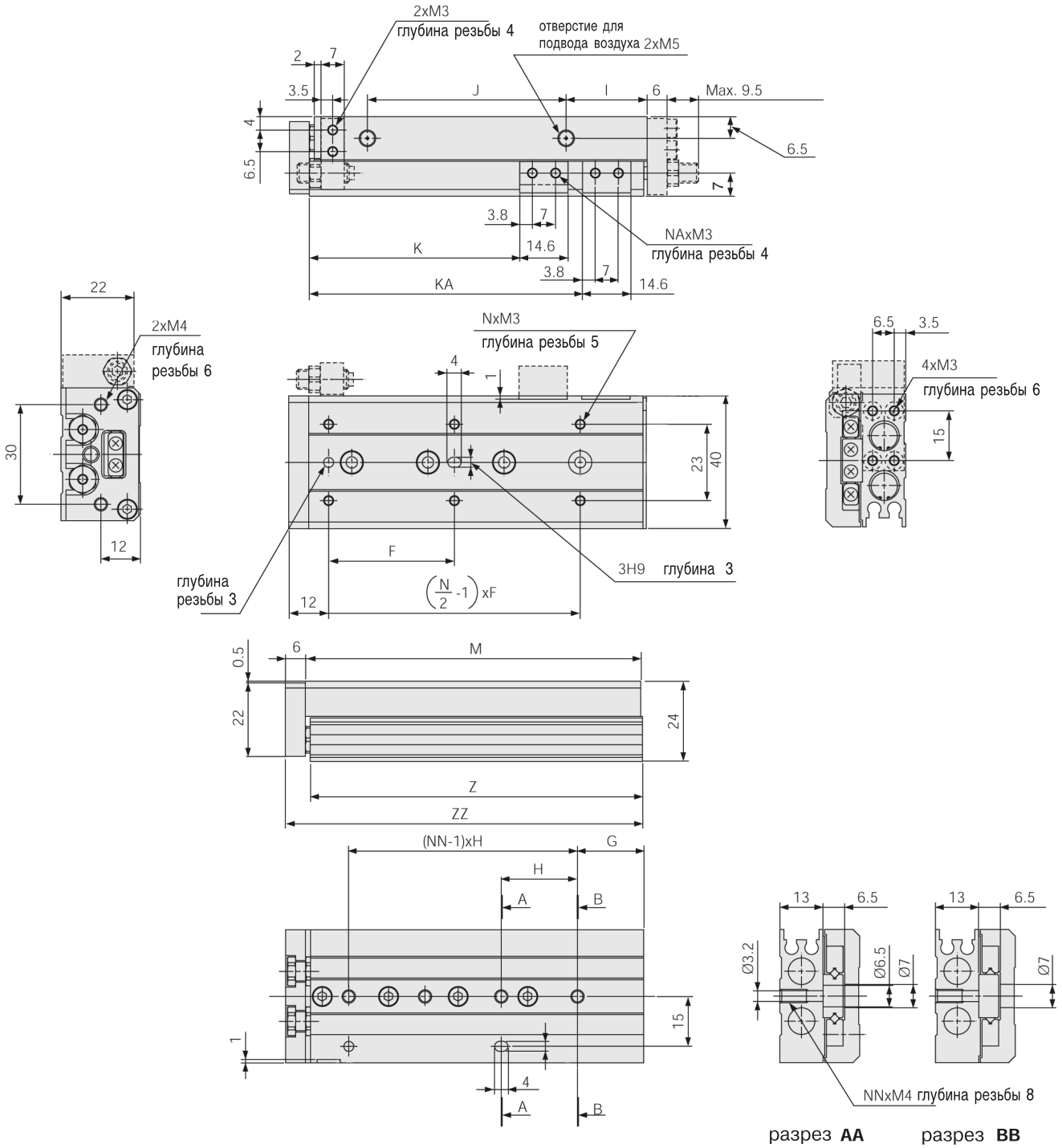

	F	N	G	H	NN	GA	HA	I	J	K	KA	NA	M	Z	ZZ
MXS8-10	25	4	9	28	2	17	20	13	19.5	23.5	—	2	49	48.5	56
MXS8-20	25	4	12	30	2	12	30	8.5	29	33.5	—	2	54	53.5	61
MXS8-30	40	4	13	20	3	33	20	9.5	39	43.5	—	2	65	64.5	72
MXS8-40	50	4	15	28	3	43	28	10.5	56	53.5	—	2	83	82.5	90
MXS8-50	38	6	20	23	4	43	46	24.5	60	63.5	82.5	4	101	100.5	108
MXS8-75	50	6	27	28	5	83	56	38.5	96	88.5	132.5	4	151	150.5	158

Размеры

MXS12

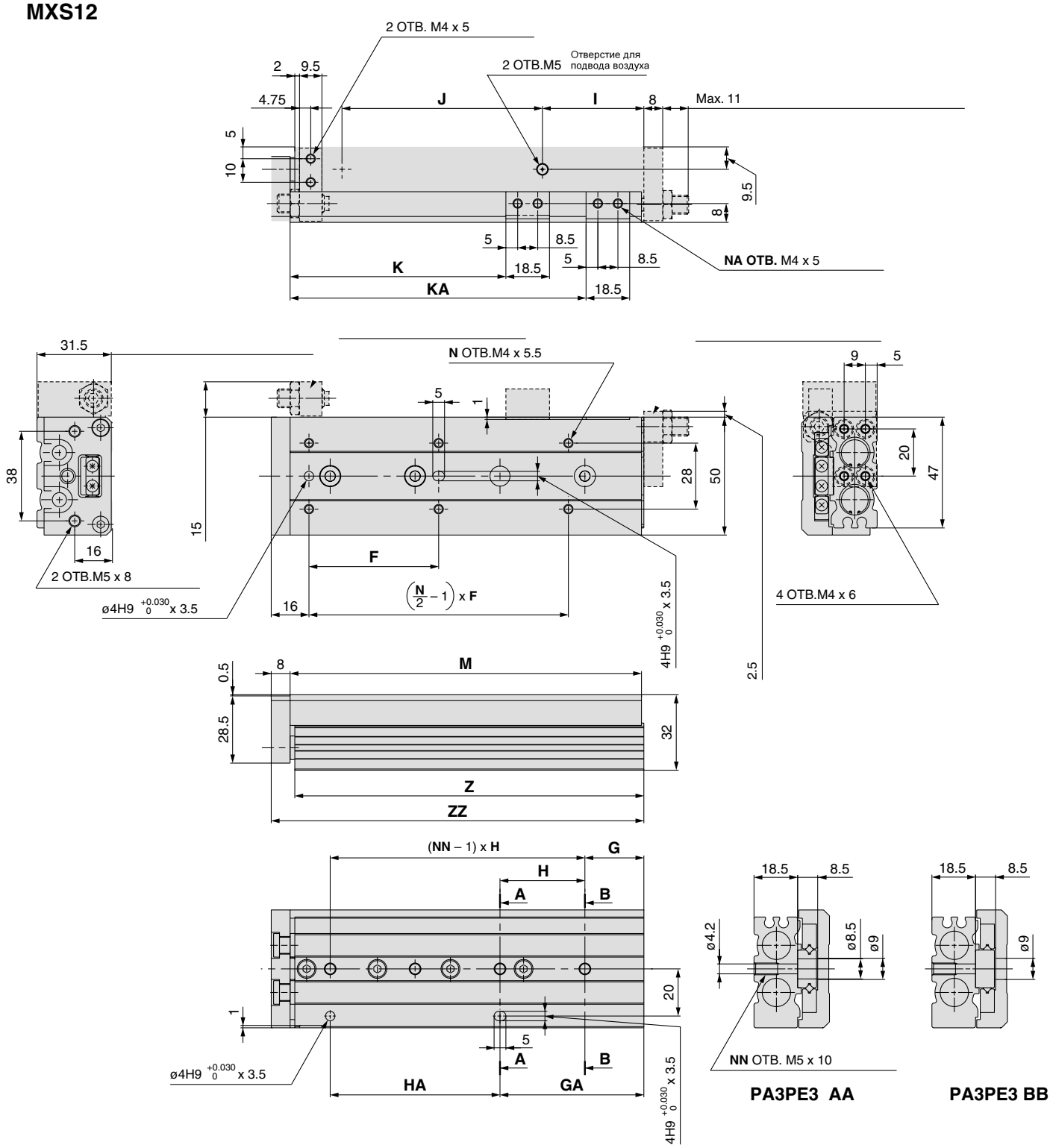

	F	N	G	H	NN	GA	HA	I	J	K	KA	NA	M	Z	ZZ
MXS12-10	35	4	15	40	2	15	40	10	40	26.5	—	2	71	70	80
MXS12-20	35	4	15	40	2	15	40	10	40	36.5	—	2	71	70	80
MXS12-30	35	4	15	40	2	15	40	10	40	46.5	—	2	71	70	80
MXS12-40	50	4	17	25	3	42	25	10	52	56.5	—	2	83	82	92
MXS12-50	35	6	15	36	3	51	36	22	60	66.5	—	2	103	102	112
MXS12-75	55	6	25	36	4	61	72	43	85	91.5	125.5	4	149	148	158
MXS12-100	65	6	35	38	5	111	76	52	130	116.5	179.5	4	203	202	212

Размеры

MXS16

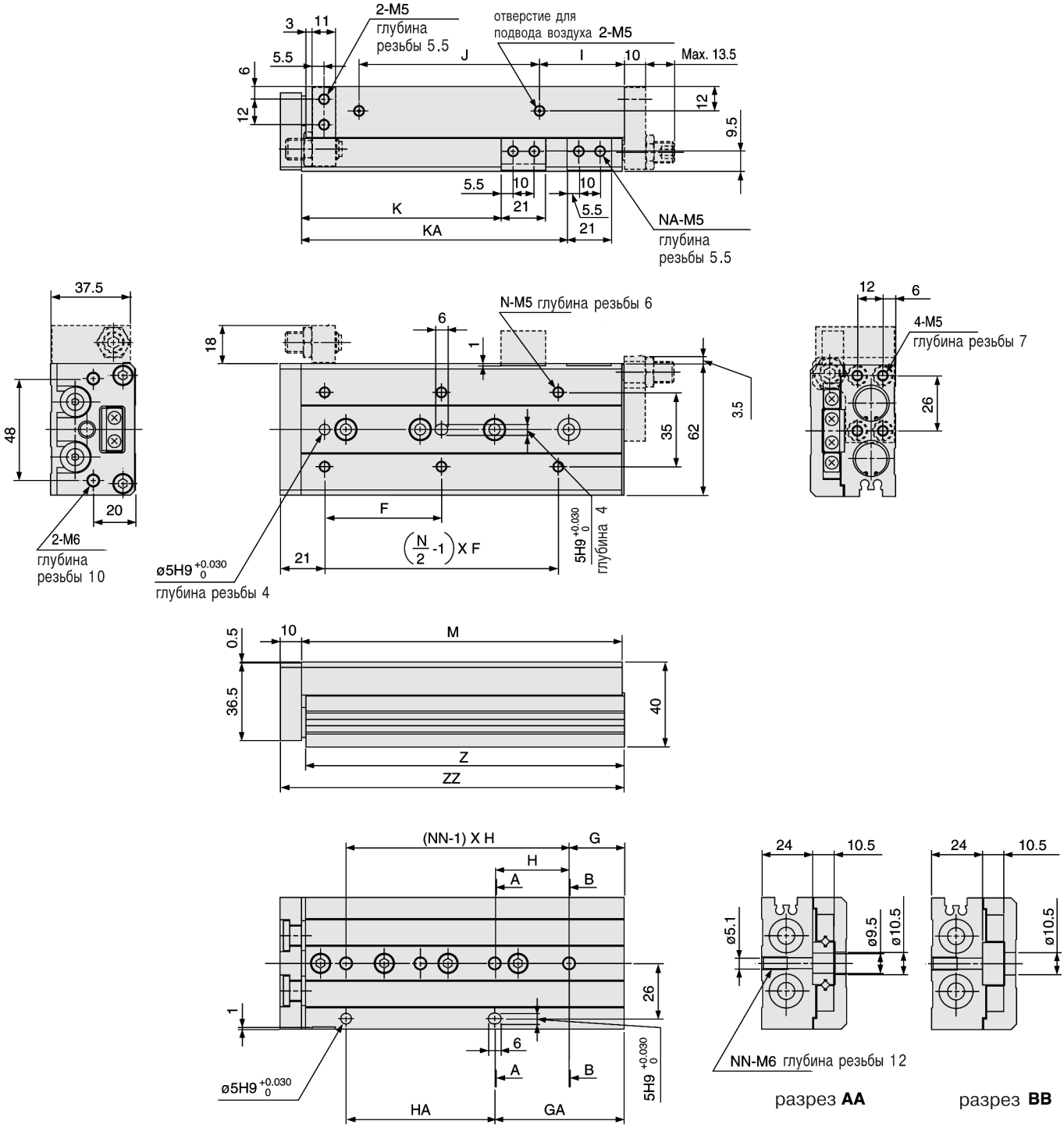

	F	N	G	H	NN	GA	HA	I	J	K	KA	NA	M	Z	ZZ
MXS16-10	35	4	16	40	2	16	40	10	40	29	—	2	76	75	87
MXS16-20	35	4	16	40	2	16	40	10	40	39	—	2	76	75	87
MXS16-30	35	4	16	40	2	16	40	10	40	49	—	2	76	75	87
MXS16-40	40	4	16	50	2	16	50	10	50	59	—	2	86	85	97
MXS16-50	30	6	21	30	3	51	30	15	60	69	—	2	101	100	112
MXS16-75	55	6	26	35	4	61	70	40	85	94	125	4	151	150	162
MXS16-100	65	6	39	35	5	109	70	55	118	119	173	4	199	198	210
MXS16-125	70	8	19	35	7	159	70	68	155	144	223	4	249	248	260

Размеры

EMXS20

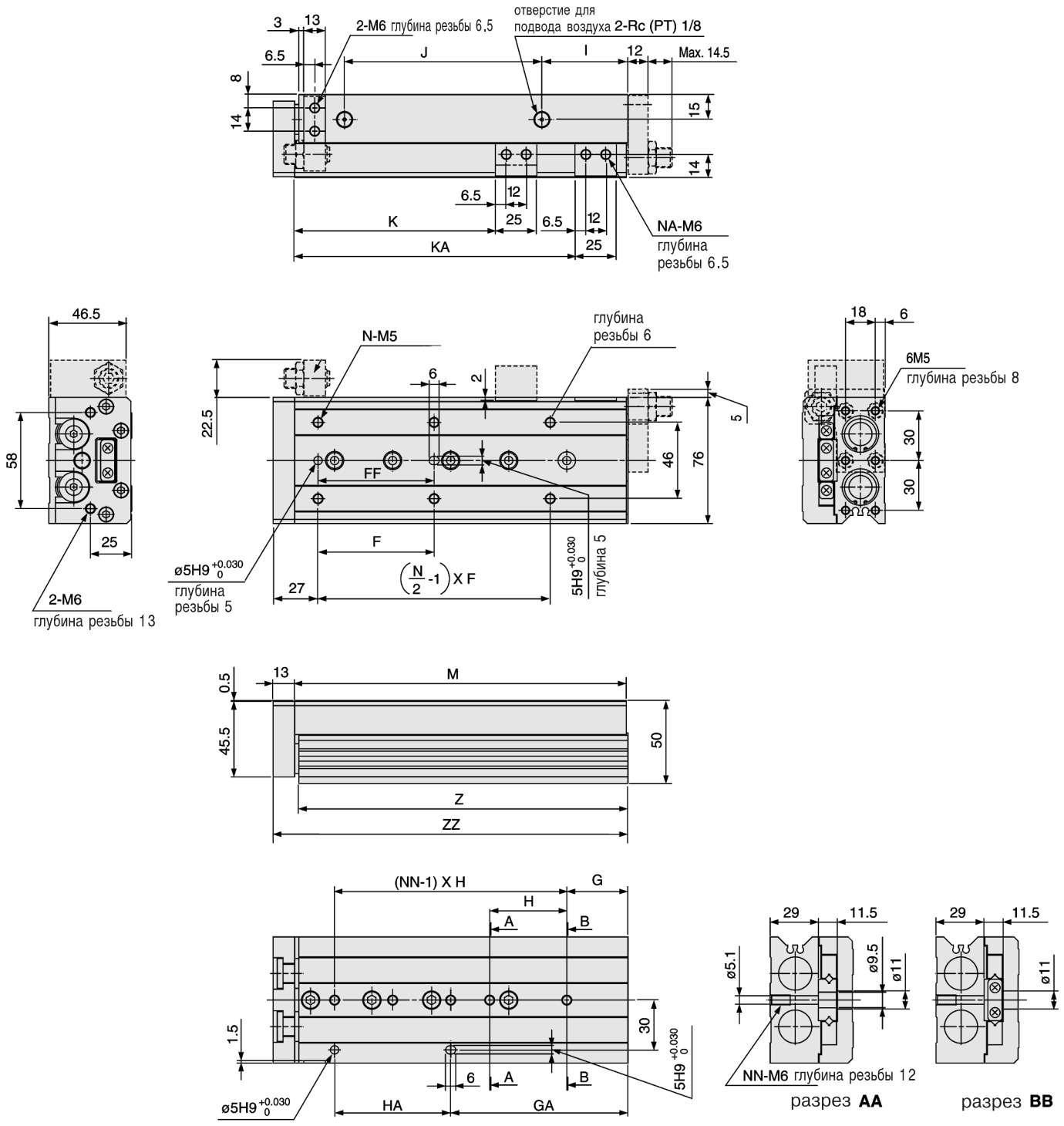

	F	FF	N	G	H	NN	GA	HA	I	J	K	KA	NA	M	Z	ZZ
EMXS20-10	50	40	4	15	45	2	25	35	10	44	31	—	2	83	81.5	97
EMXS20-20	50	40	4	15	45	2	25	35	10	44	41	—	2	83	81.5	97
EMXS20-30	50	40	4	15	45	2	25	35	10	44	51	—	2	83	81.5	97
EMXS20-40	60	50	4	15	55	2	35	35	10	54	61	—	2	93	91.5	107
EMXS20-50	35	35	6	15	35	3	50	35	10	69	71	—	2	108	106.5	122
EMXS20-75	60	60	6	19	35	4	54	70	10	108	96	—	2	147	145.5	161
EMXS20-100	70	70	6	37	35	5	107	70	58	113	121	169	4	200	198.5	214
EMXS20-125	70	70	8	41	38	6	155	76	70	155	146	223	4	254	252.5	268
EMXS20-150	80	80	8	19	44	7	195	88	87	190	171	275	4	306	304.5	320

Компания SMC сохраняет за собой право на внесение технических и размерных изменений

Размеры

EMXS25

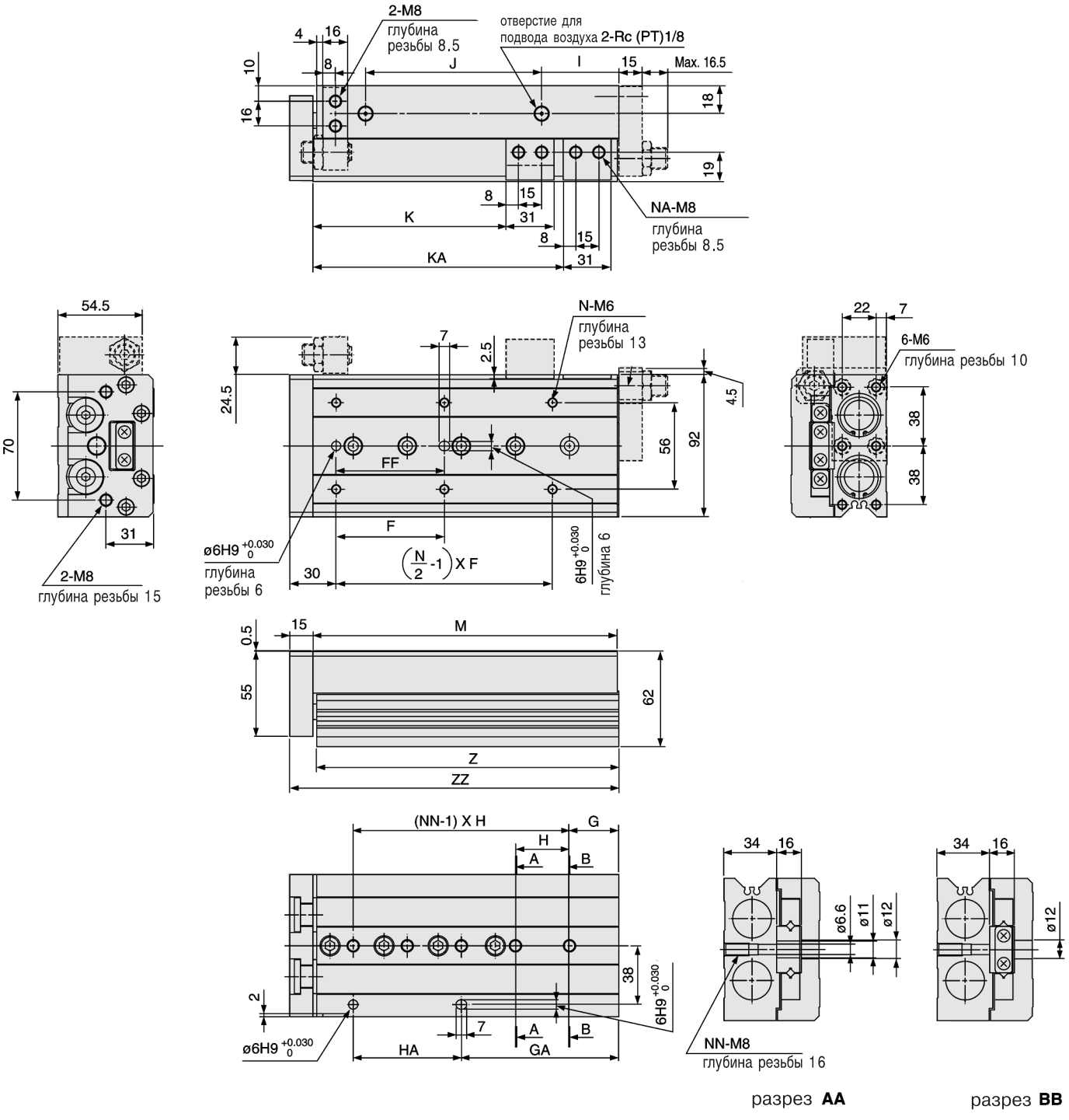

	F	FF	N	G	H	NN	GA	HA	I	J	K	KA	NA	M	Z	ZZ
EMXS25-10	50	40	4	22	45	2	22	45	12	47	35	—	2	92	90.5	108
EMXS25-20	50	40	4	22	45	2	22	45	12	47	45	—	2	92	90.5	108
EMXS25-30	50	40	4	22	45	2	22	45	12	47	55	—	2	92	90.5	108
EMXS25-40	60	50	4	22	55	2	22	55	12	57	65	—	2	102	100.5	118
EMXS25-50	35	35	6	20	35	3	55	35	12	70	75	—	2	115	113.5	131
EMXS25-75	60	60	6	26	35	4	61	70	33	90	100	—	2	156	154.5	172
EMXS25-100	70	70	6	32	35	5	102	70	50	114	125	162	4	197	195.5	213
EMXS25-125	75	75	8	40	38	6	154	76	67	155	150	218	4	255	253.5	271
EMXS25-150	80	80	8	30	40	7	190	80	82	180	175	258	4	295	293.5	311

Air Slide Table (Symmetric Type)
Series MXS□L

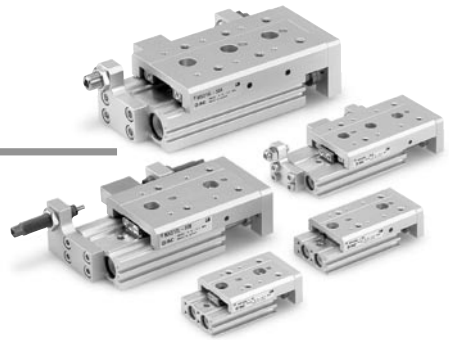

How to Order

Air slide table **MXS 12 □ L — 50 AS — M9N S**

Port thread type

-	M	ø6 to ø16
	Rc	ø20, ø25
TN	NPT	
TF	G	

Symmetric type

Bore size (Stroke (mm))

6	10, 20, 30, 40, 50
8	10, 20, 30, 40, 50, 75
12	10, 20, 30, 40, 50, 75, 100
16	10, 20, 30, 40, 50, 75, 100, 125
20	10, 20, 30, 40, 50, 75, 100, 125, 150
25	10, 20, 30, 40, 50, 75, 100, 125, 150

Adjuster option

-	Without adjuster
AS	Adjuster on extension end
AT	Adjuster on retraction end
A	Adjuster on both ends
BS (1)	Absorber on extension end
BT (1)	Absorber on retraction end
B (1)	Absorber on both ends

Note 1) Options BS, BT and B are not available with the MXS6L series.
Note 2) Functional option is not available with the MXS□□L series.

Auto switch

-	Without auto switch

∗ For the applicable auto switch models, refer to the table below.

Number of auto switches

-	2 pcs.
S	1 pc.
n	"n" pcs.

Specifications

Specifications are the same as the standard type. Refer to page 4.

Applicable Auto Switches/Refer to "SMC Best Pneumatics" catalogue for further information on auto switches.

Type	Special function	Electrical entry	Indicator light	Wiring (Output)	Load voltage			Auto switch model		Lead wire length ∗ (m)			Pre-wired connector	Applicable load	
					DC		AC	Perpendicular	In-line	0.5 (Nil)	3 (L)	5 (Z)			
Reed switch	—	Grommet	Yes	3-wire (NPN equivalent)	—	5 V	—	**A96V**	**A96**	●	●	—	—	IC circuit	—
				2-wire	24 V	12 V	100 V	**A93V**	**A93**	●	●	—	—	—	Relay, PLC
Solid state switch	—	Grommet	Yes	3-wire (NPN)	24 V	5 V, 12 V	—	**M9NV**	**M9N**	●	●	○	○	IC circuit	Relay, PLC
				3-wire (PNP)				**M9PV**	**M9P**	●	●	○	○		
				2-wire		12 V		**M9BV**	**M9B**	●	●	○	○	—	
	Diagnostic indication (2-colour indication)			3-wire (NPN)		5 V,12 V		**M9NWV**	**M9NW**	●	●	○	○	IC circuit	
				3-wire (PNP)				**M9PWV**	**M9PW**	●	●	○	○		
				2-wire		12 V		**M9BWV**	**M9BW**	●	●	○	○	—	

∗ Lead wire length symbols: 0.5 m ····· Nil (Example) M9N
3 m ····· L (Example) M9NL
5 m ····· Z (Example) M9NZ

∗ Solid state switches marked with "○" are produced upon receipt of order.

• Since there are additional applicable auto switches than are listed, refer to page 31.
• For details on auto switches with a pre-wired connector, refer to "SMC Best Pneumatics" catalogue.

Dimensions: MXS6L/Symmetric Type

Basic style

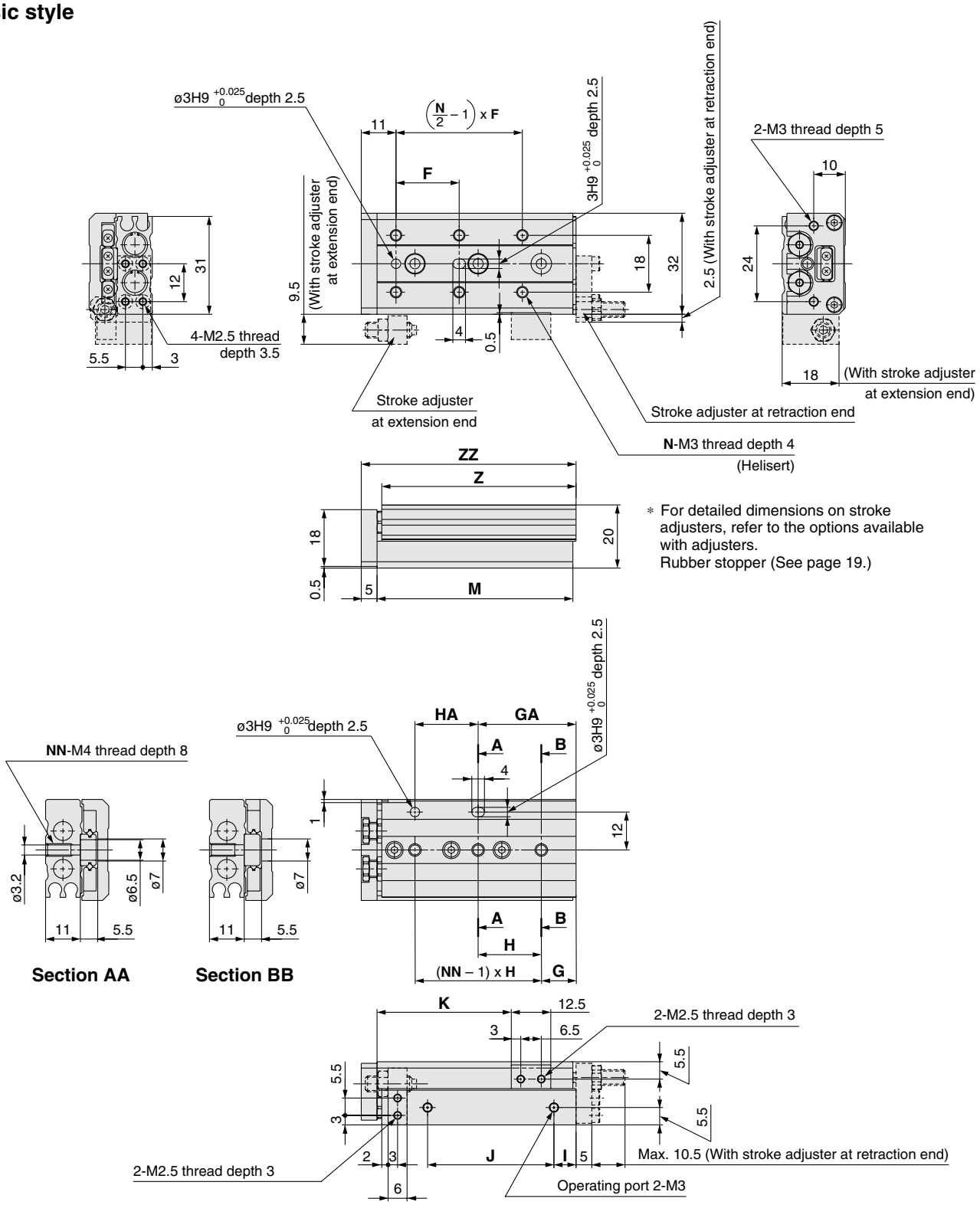

(mm)

Model	F	N	G	H	NN	GA	HA	I	J	K	M	Z	ZZ
MXS6L-10	20	4	6	25	2	11	20	10	17	22.5	42	41.5	48
MXS6L-20	30	4	6	35	2	21	20	10	27	32.5	52	51.5	58
MXS6L-30	20	6	11	20	3	31	20	7	40	42.5	62	61.5	68
MXS6L-40	28	6	13	30	3	43	30	19	50	52.5	84	83.5	90
MXS6L-50	38	6	17	24	4	41	48	25	60	62.5	100	99.5	106

Dimensions: MXS8L/Symmetric Type

Basic style

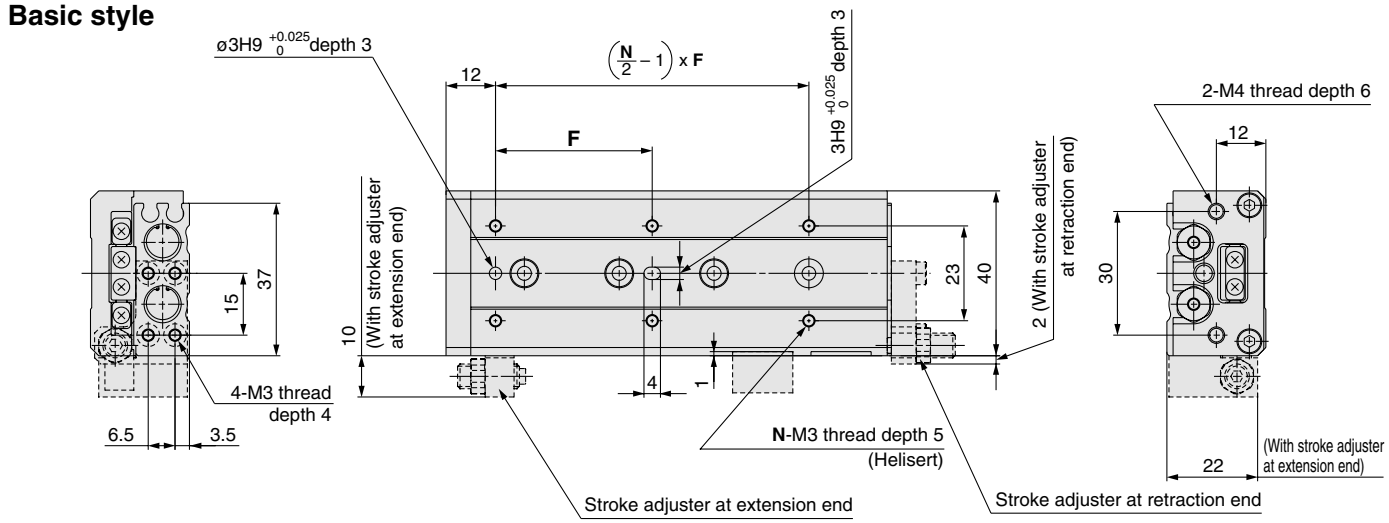

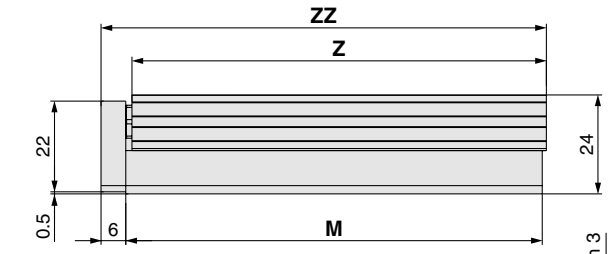

* For detailed dimensions on stroke adjusters, refer to the options available with adjusters.
Rubber stopper (See page 19.)
Shock absorber (See page 20.)

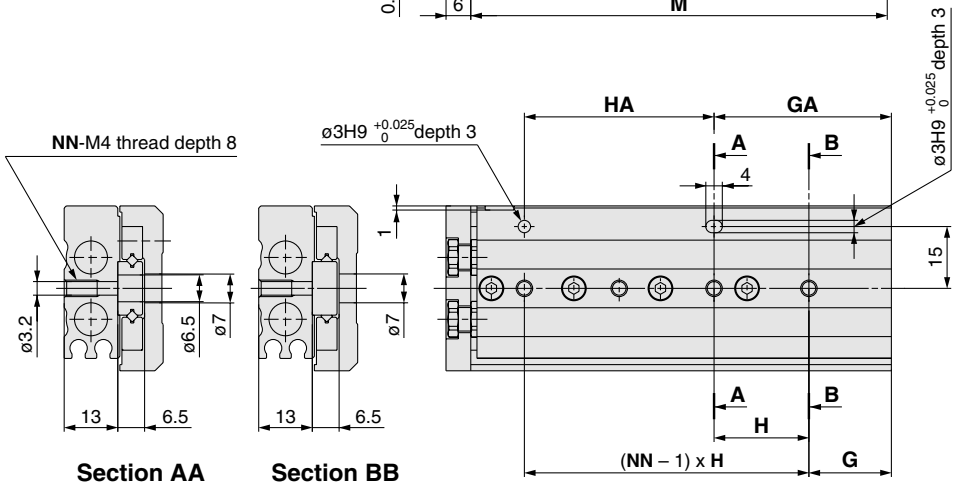

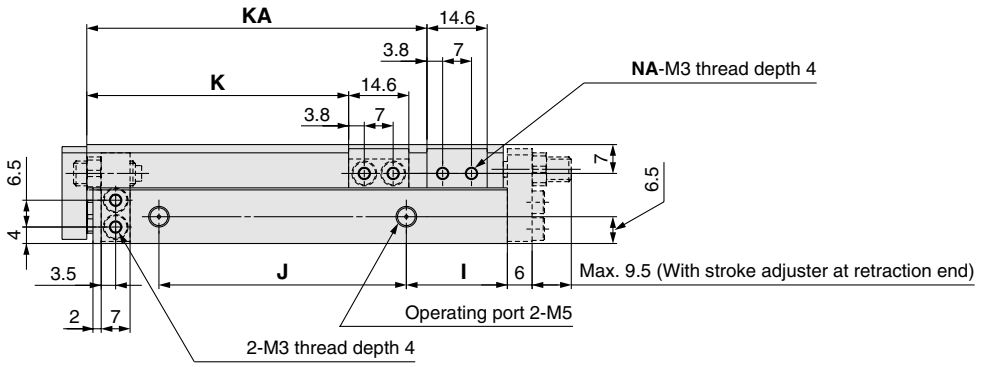

(mm)

Model	F	N	G	H	NN	GA	HA	I	J	K	KA	NA	M	Z	ZZ
MXS8L-10	25	4	9	28	2	17	20	13	19.5	23.5	—	2	49	48.5	56
MXS8L-20	25	4	12	30	2	12	30	8.5	29	33.5	—	2	54	53.5	61
MXS8L-30	40	4	13	20	3	33	20	9.5	39	43.5	—	2	65	64.5	72
MXS8L-40	50	4	15	28	3	43	28	10.5	56	53.5	—	2	83	82.5	90
MXS8L-50	38	6	20	23	4	43	46	24.5	60	63.5	82.5	4	101	100.5	108
MXS8L-75	50	6	27	28	5	83	56	38.5	96	88.5	132.5	4	151	150.5	158

Regarding the external dimensions with a shock absorber, view the external dimensions of MXS8 symmetrically on page 10.

Dimensions: MXS12L/Symmetric Type

Basic style

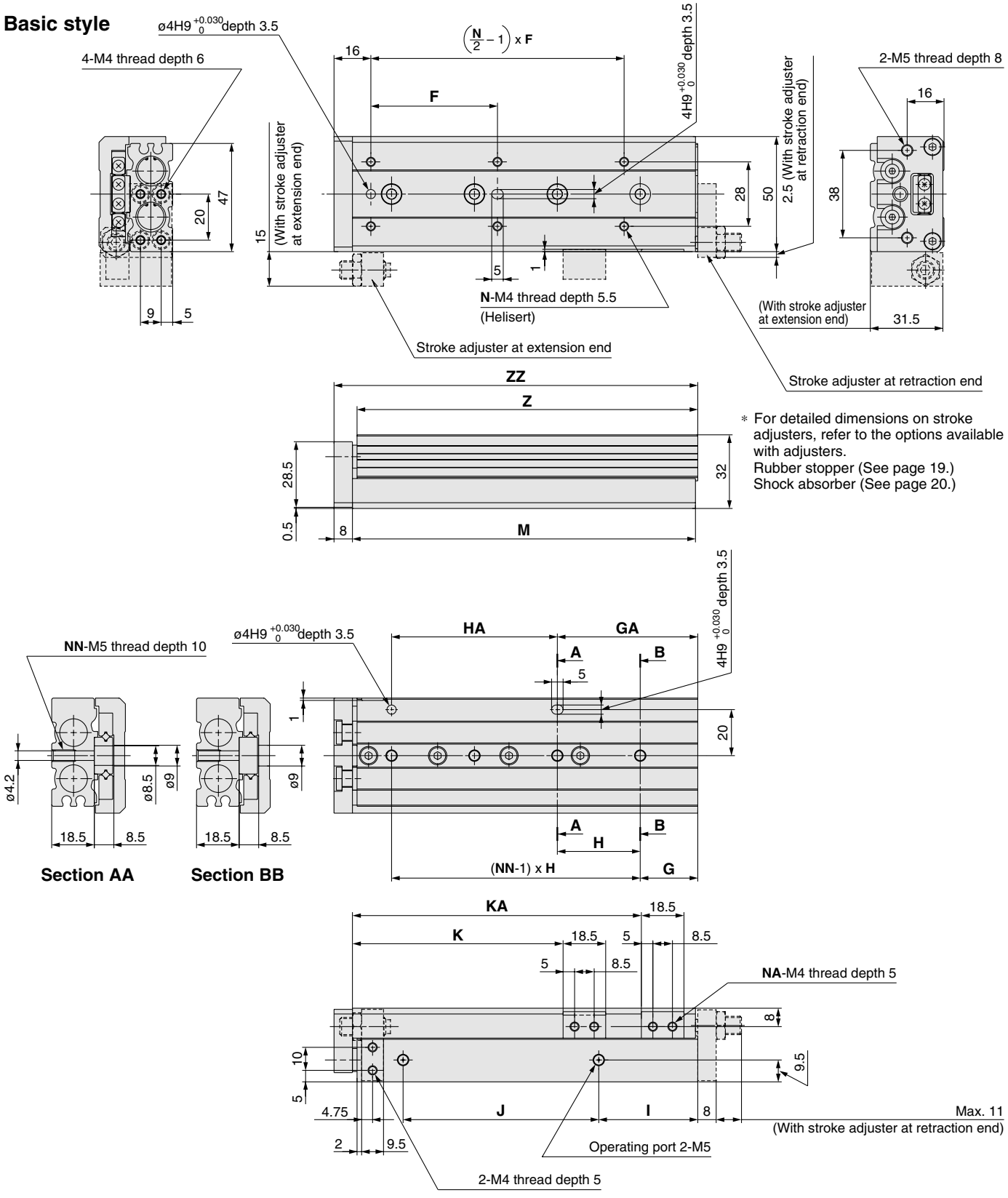

* For detailed dimensions on stroke adjusters, refer to the options available with adjusters.
Rubber stopper (See page 19.)
Shock absorber (See page 20.)

(mm)

Model	F	N	G	H	NN	GA	HA	I	J	K	KA	NA	M	Z	ZZ
MXS12L-10	35	4	15	40	2	15	40	10	40	26.5	—	2	71	70	80
MXS12L-20	35	4	15	40	2	15	40	10	40	36.5	—	2	71	70	80
MXS12L-30	35	4	15	40	2	15	40	10	40	46.5	—	2	71	70	80
MXS12L-40	50	4	17	25	3	42	25	10	52	56.5	—	2	83	82	92
MXS12L-50	35	6	15	36	3	51	36	22	60	66.5	—	2	103	102	112
MXS12L-75	55	6	25	36	4	61	72	43	85	91.5	125.5	4	149	148	158
MXS12L-100	65	6	35	38	5	111	76	52	130	116.5	179.5	4	203	202	212

Regarding the external dimensions with a shock absorber, view the external dimensions of MXS12 symmetrically on page 12.

Dimensions: MXS16L/Symmetric Type

Basic style

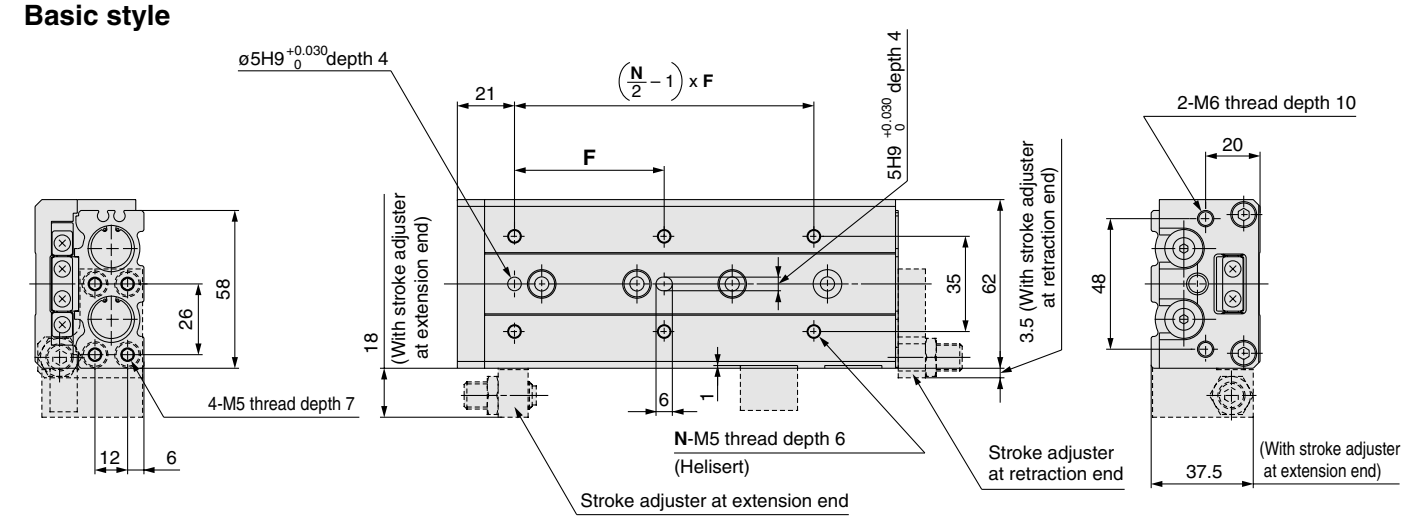

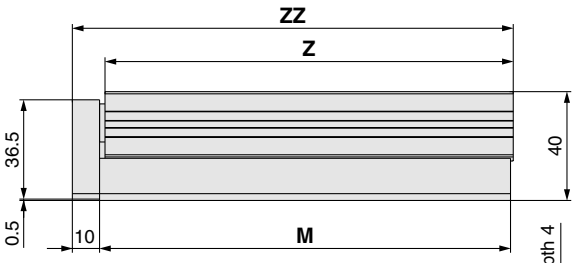

* For detailed dimensions on stroke adjusters, refer to the options available with adjusters.
Rubber stopper (See page 19.)
Shock absorber (See page 20.)

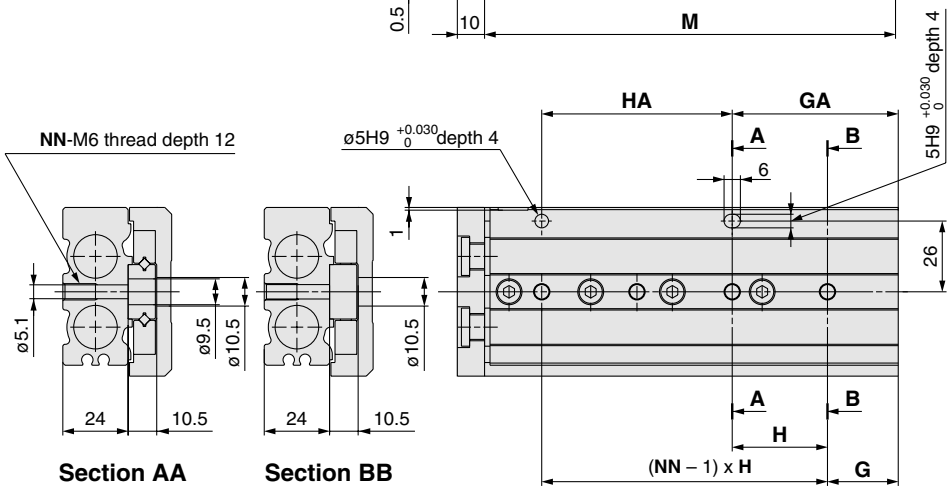

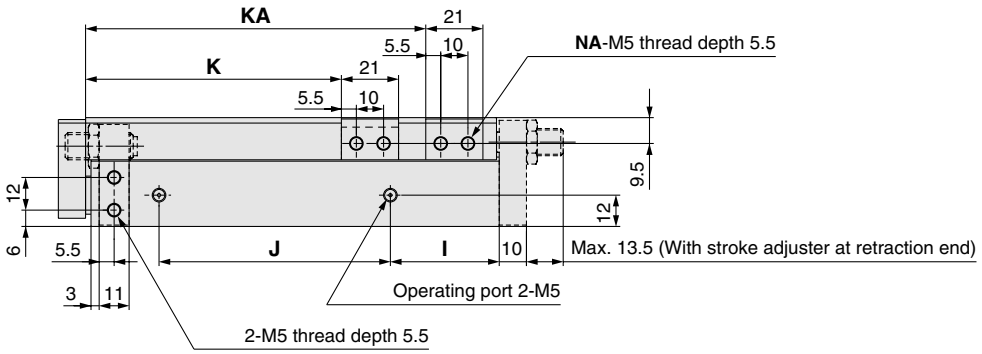

(mm)

Model	F	N	G	H	NN	GA	HA	I	J	K	KA	NA	M	Z	ZZ
MXS16L-10	35	4	16	40	2	16	40	10	40	29	—	2	76	75	87
MXS16L-20	35	4	16	40	2	16	40	10	40	39	—	2	76	75	87
MXS16L-30	35	4	16	40	2	16	40	10	40	49	—	2	76	75	87
MXS16L-40	40	4	16	50	2	16	50	10	50	59	—	2	86	85	97
MXS16L-50	30	6	21	30	3	51	30	15	60	69	—	2	101	100	112
MXS16L-75	55	6	26	35	4	61	70	40	85	94	125	4	151	150	162
MXS16L-100	65	6	39	35	5	109	70	55	118	119	173	4	199	198	210
MXS16L-125	70	8	19	35	7	159	70	68	155	144	223	4	249	248	260

Regarding the external dimensions with a shock absorber, view the external dimensions of MXS16 symmetrically on page 14.

Dimensions: MXS20L/Symmetric Type

Basic style

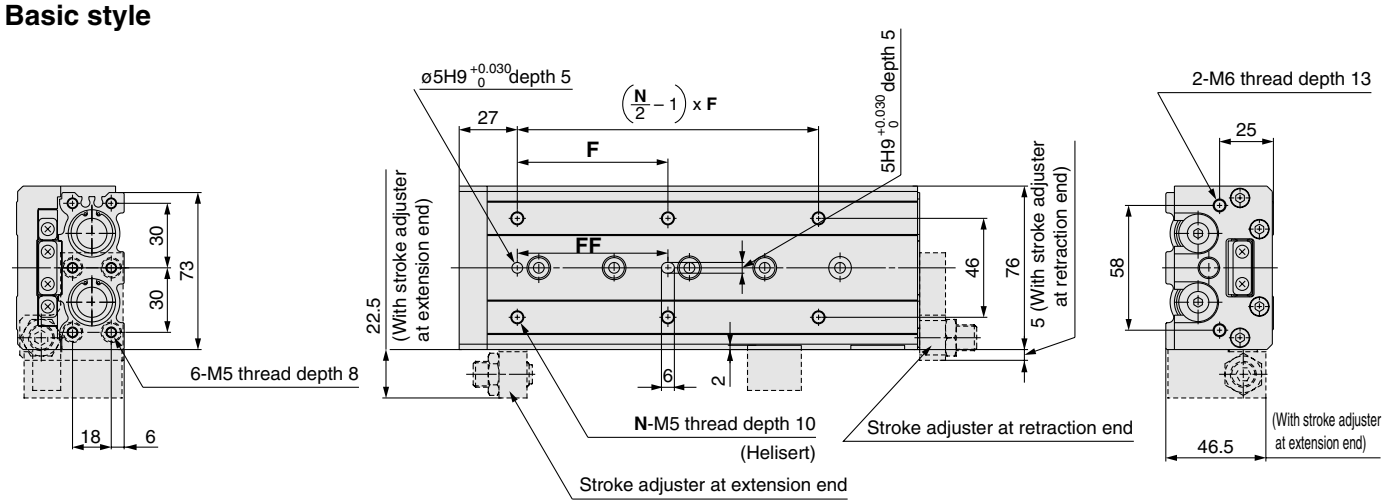

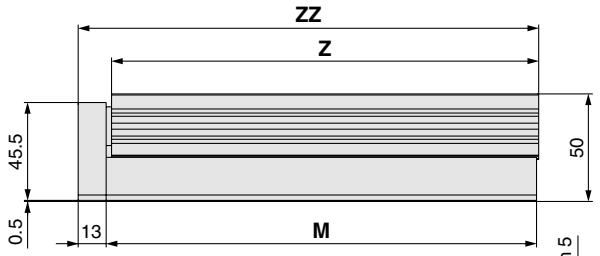

* For detailed dimensions on stroke adjusters, refer to the options available with adjusters.
Rubber stopper (See page 19.)
Shock absorber (See page 20.)

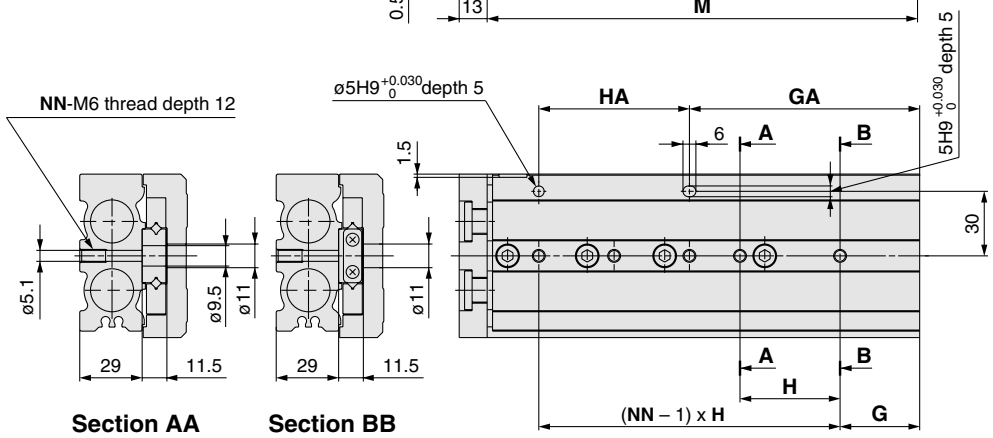

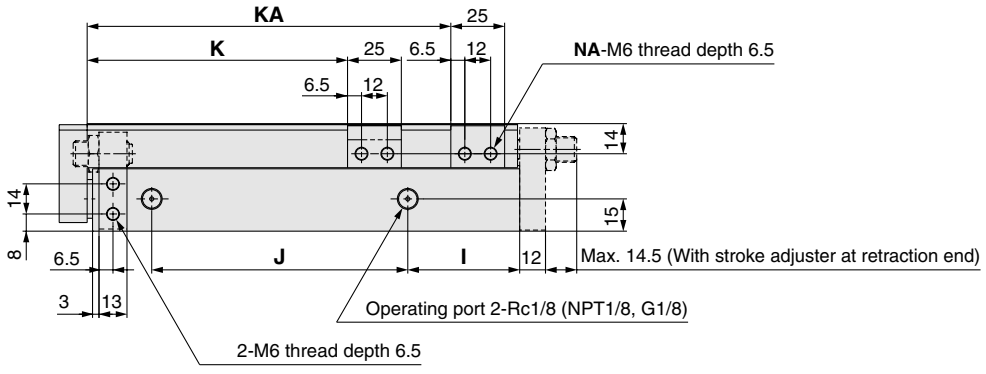

(mm)

Model	F	FF	N	G	H	NN	GA	HA	I	J	K	KA	NA	M	Z	ZZ
MXS20L-10	50	40	4	15	45	2	25	35	10	44	31	—	2	83	81.5	97
MXS20L-20	50	40	4	15	45	2	25	35	10	44	41	—	2	83	81.5	97
MXS20L-30	50	40	4	15	45	2	25	35	10	44	51	—	2	83	81.5	97
MXS20L-40	60	50	4	15	55	2	35	35	10	54	61	—	2	93	91.5	107
MXS20L-50	35	35	6	15	35	3	50	35	10	69	71	—	2	108	106.5	122
MXS20L-75	60	60	6	19	35	4	54	70	10	108	96	—	2	147	145.5	161
MXS20L-100	70	70	6	37	35	5	107	70	58	113	121	169	4	200	198.5	214
MXS20L-125	70	70	8	41	38	6	155	76	70	155	146	223	4	254	252.5	268
MXS20L-150	80	80	8	19	44	7	195	88	87	190	171	275	4	306	304.5	320

Regarding the external dimensions with a shock absorber, view the external dimensions of MXS20 symmetrically on page 16.

Dimensions: MXS25L/Symmetric Type

Basic style

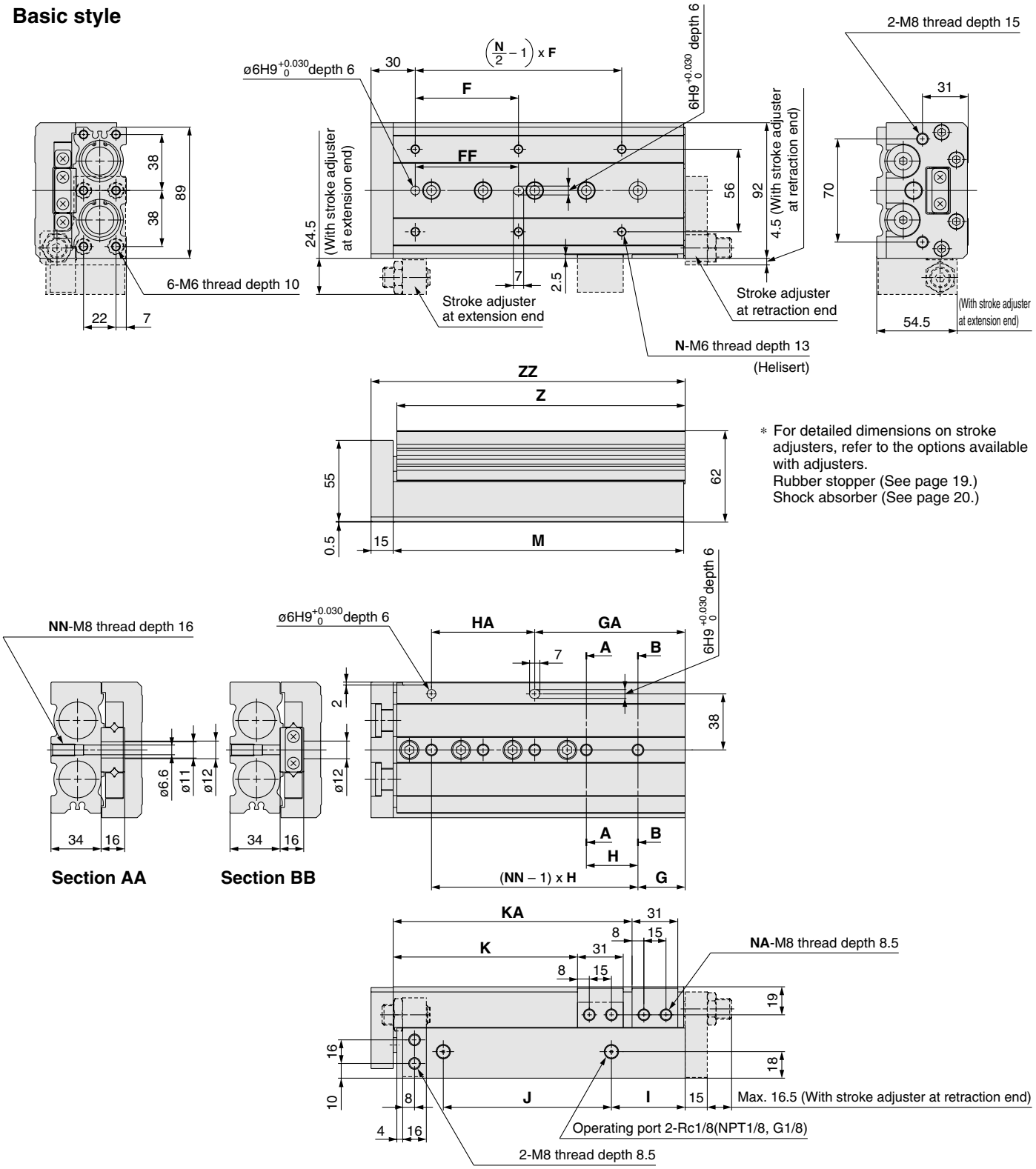

* For detailed dimensions on stroke adjusters, refer to the options available with adjusters.
Rubber stopper (See page 19.)
Shock absorber (See page 20.)

(mm)

Model	F	FF	N	G	H	NN	GA	HA	I	J	K	KA	NA	M	Z	ZZ
MXS25L-10	50	40	4	22	45	2	22	45	12	47	35	—	2	92	90.5	108
MXS25L-20	50	40	4	22	45	2	22	45	12	47	45	—	2	92	90.5	108
MXS25L-30	50	40	4	22	45	2	22	45	12	47	55	—	2	92	90.5	108
MXS25L-40	60	50	4	22	55	2	22	55	12	57	65	—	2	102	100.5	118
MXS25L-50	35	35	6	20	35	3	55	35	12	70	75	—	2	115	113.5	131
MXS25L-75	60	60	6	26	35	4	61	70	33	90	100	—	2	156	154.5	172
MXS25L-100	70	70	6	32	35	5	102	70	50	114	125	162	4	197	195.5	213
MXS25L-125	75	75	8	40	38	6	154	76	67	155	150	218	4	255	253.5	271
MXS25L-150	80	80	8	30	40	7	190	80	82	180	175	258	4	295	293.5	311

Regarding the external dimensions with a shock absorber, view the external dimensions of MXS25 symmetrically on page 18.

Proper Position for Auto Switch Mounting (Detection at stroke end)

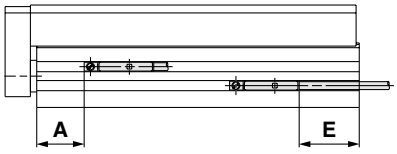

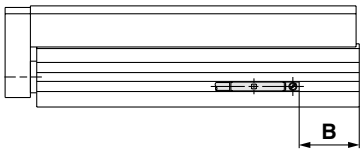

Reed Switch: D-A90, D-A93, D-A96, D-A90V, D-A93V, D-A96V

Model	A	B Stroke									E Stroke								
		10	20	30	40	50	75	100	125	150	10	20	30	40	50	75	100	125	150
MXS6	5.9	5.6	5.6	5.6	17.6	23.6	—	—	—	—	3.6 (1.1)	3.6 (1.1)	3.6 (1.1)	15.6 (13.1)	21.6 (19.1)	—	—	—	—
MXS8	7.6	10.9	5.9	6.9	14.9	22.9	47.9	—	—	—	8.9 (6.4)	3.9 (1.4)	4.9 (2.4)	12.9 (10.4)	20.9 (18.4)	45.9 (43.4)	—	—	—
MXS12	11.6	28.4	18.4	8.4	10.4	20.4	41.4	70.4	—	—	26.4 (23.9)	16.4 (13.9)	6.4 (3.9)	8.4 (5.9)	18.4 (15.9)	39.4 (36.9)	68.4 (65.9)	—	—
MXS16	16.3	28.7	18.7	8.7	8.7	13.7	38.7	61.7	86.7	—	26.7 (24.2)	16.7 (14.2)	6.7 (4.2)	6.7 (4.2)	11.7 (9.2)	36.7 (34.2)	59.7 (57.2)	84.7 (82.2)	—
MXS20	18.9	32.6	22.6	12.6	12.6	17.6	31.6	59.6	88.6	115.6	30.6 (28.1)	20.6 (18.1)	10.6 (8.1)	10.6 (8.1)	15.6 (13.1)	29.6 (27.1)	57.6 (55.1)	86.6 (84.1)	113.6 (111.1)
MXS25	23	37.5	27.5	17.5	17.5	20.5	36.5	52.5	85.5	100.5	35.5 (33)	25.5 (23)	15.5 (13)	15.5 (13)	18.5 (16)	34.5 (32)	50.5 (48)	83.5 (81)	98.5 (96)

∗ ( ): Denotes D-A93.

Solid State Switch: D-M9B, D-M9N, D-M9P, D-M9BW, D-M9NW, D-M9PW

Model	A	B Stroke									E Stroke								
		10	20	30	40	50	75	100	125	150	10	20	30	40	50	75	100	125	150
MXS6	10	9.6	9.6	9.6	21.6	27.6	—	—	—	—	-0.4	-0.4	-0.4	11.6	17.5	—	—	—	—
MXS8	11.6	14.9	9.9	10.9	18.9	26.9	51.9	—	—	—	4.9	-0.1	0.9	8.9	16.9	41.9	—	—	—
MXS12	15.6	32.4	22.4	12.4	14.4	24.4	45.4	74.4	—	—	22.4	12.4	2.4	4.4	14.4	35.4	64.4	—	—
MXS16	20.3	32.7	22.7	12.7	12.7	17.7	42.7	65.7	90.7	—	22.7	12.7	2.7	2.7	7.7	32.7	55.7	80.7	—
MXS20	22.9	36.6	26.6	16.6	16.6	21.6	35.6	63.6	92.6	119.6	26.6	16.6	6.6	6.6	11.6	25.6	53.6	82.6	109.6
MXS25	27	41.5	31.5	21.5	21.5	24.5	40.5	56.5	89.5	104.5	31.5	21.5	11.5	11.5	14.5	30.5	46.5	79.5	94.5

Solid State Switch: D-M9BV, D-M9NV, D-M9PV, D-M9BWV, D-M9NWV, D-M9PWV

Model	A	B Stroke									E Stroke								
		10	20	30	40	50	75	100	125	150	10	20	30	40	50	75	100	125	150
MXS6	10	9.6	9.6	9.6	21.6	27.6	—	—	—	—	1.6	1.6	1.6	13.6	19.6	—	—	—	—
MXS8	11.6	14.9	9.9	10.9	18.9	26.9	51.9	—	—	—	6.9	1.9	2.9	10.9	18.9	43.9	—	—	—
MXS12	15.6	32.4	22.4	12.4	14.4	24.4	45.4	74.4	—	—	24.4	14.4	4.4	6.4	16.4	37.4	66.4	—	—
MXS16	20.3	32.7	22.7	12.7	12.7	17.7	42.7	65.7	90.7	—	24.7	14.7	4.7	4.7	9.7	34.7	57.7	82.7	—
MXS20	22.9	36.6	26.6	16.6	16.6	21.6	35.6	63.6	92.6	119.6	28.6	18.6	8.6	8.6	13.6	27.6	55.6	84.6	111.6
MXS25	27	41.5	31.5	21.5	21.5	24.5	40.5	56.5	89.5	104.5	33.5	23.5	13.5	13.5	16.5	32.5	48.5	81.5	96.5

Auto Switch Mounting

⚠ Caution

Auto Switch Mounting Tool

- When tightening the auto switch mounting screw (included with auto switch), use a watchmakers' screwdriver with an approximately 5 to 6 mm diameter handle.

Tightening Torque

- Use a torque of approximately 0.05 to 0.1 N·m. As a guide, the set screw can be tightened about 90° past the position at which tightening can be felt.

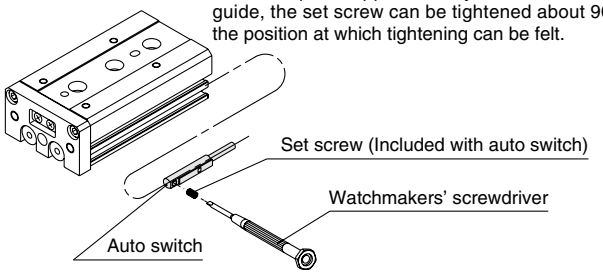

Operating Range

(mm)

Auto switch model	Applicable bore size (mm)					
	6	8	12	16	20	25
D-A9□/A9□V	4.5	5	6	7	8	8
D-M9□/M9□V	1.5	1.5	2.5	3	3	3
D-M9□W/M9□WV	2	2.5	3	4	6	6

Other than the applicable auto switches listed in "How to Order", the following auto switches can be mounted. For detailed specifications, refer to "SMC Best Pneumatics" catalogue.

Type	Model	Electrical entry (direction)	Features
Reed switch	D-A90	Grommet (In-line)	Without indicator light
	D-A90V	Grommet (Perpendicular)	

∗ Normally closed (NC=b contact), solid state switch (D-F9G/F9H type) are also available.
For details, refer to "SMC Best Pneumatics" catalogue.

Series MXS
Made to Order

Contact SMC for detailed dimensions, specifications and delivery.

Made to Order

	Symbol
Anti-corrosive spec. for guide unit	-X42

MXS | Standard part no. | -X42

-X42: Anti-corrosive spec. for guide unit

The rail and guide block undergo an anti-corrosive treatment.

Specifications

Model	Anti-corrosive specification type
Bore size (mm)	6, 8, 12, 16, 20, 25
Fluid	Air
Surface treatment	Special anti-corrosive treatment Note 2)

Note 1) Dimensions are the same as the standard type.
Note 2) The rail and guide are black due to the special anti-corrosive treatment.

Series MXS
Safety Instructions

These safety instructions are intended to prevent a hazardous situation and/or equipment damage. These instructions indicate the level of potential hazard by labels of **"Caution", "Warning"** or **"Danger"**. To ensure safety, be sure to observe ISO 4414 Note 1), JIS B 8370 Note 2) and other safety practices.

■ Explanation of the labels

Labels	Explanation of the labels
⚠ **Danger**	In extreme conditions, there is a possible result of serious injury or loss of life.
⚠ **Warning**	Operator error could result in serious injury or loss of life.
⚠ **Caution**	Operator error could result in injury or equipment damage.

Note 1) ISO 4414: Pneumatic fluid power – General rules relating to systems
Note 2) JIS B 8370: General Rules for Pneumatic Equipment
Note 3) Injury indicates light wounds, burns and electrical shocks that do not require hospitalisation or hospital visits for long-term medical treatment.
Note 4) Equipment damage refers to extensive damage to the equipment and surrounding devices.

■ Selection/Handling/Applications

1. The compatibility of the pneumatic equipment is the responsibility of the person who designs the pneumatic system or decides its specifications.
Since the products specified here are used in various operating conditions, their compatibility for the specific pneumatic system must be based on specifications or post analysis and/or tests to meet the specific requirements. The expected performance and safety assurance are the responsibility of the person who has determined the compatibility of the system. This person should continuously review the suitability of all items specified, referring to the latest catalogue information with a view to giving due consideration to any possibility of equipment failure when configuring a system.

2. Only trained personnel should operate pneumatically operated machinery and equipment.
Compressed air can be dangerous if handled incorrectly. Assembly, handling or repair of pneumatic systems should be performed by trained and experienced operators.

3. Do not service machinery/equipment or attempt to remove components until safety is confirmed.
1. Inspection and maintenance of machinery/equipment should only be performed once measures to prevent falling or runaway of the driver objects have been confirmed.
2. When equipment is removed, confirm that safety process as mentioned above. Turn off the supply pressure for this equipment and exhaust all residual compressed air in the system.
3. Before machinery/equipment is restarted, take measures to prevent quick extension of a cylinder piston rod, etc.

4. Contact SMC if the product will be used in any of the following conditions:
1. Conditions and environments beyond the given specifications, or if product is used outdoors.
2. Installation on equipment in conjunction with atomic energy, railway, air navigation, vehicles, medical equipment, food and beverages, recreation equipment, emergency stop circuits, clutch and brake circuits in press applications, or safety equipment.
3. An application which has the possibility of having negative effects on people, property, or animals, requiring special safety analysis.
4. If the products are used in an interlock circuit, prepare a double interlock style circuit with a mechanical protection function for the prevention of a breakdown. And, examine the devices periodically if they function normally or not.

■ Exemption from liability

1. SMC, its officers and employees shall be exempted from liability for any loss or damage arising out of earthquakes or fire, action by a third person, accidents, customer error with or without intention, product misuse, and any other damages caused by abnormal operating conditions.
2. SMC, its officers and employees shall be exempted from liability for any direct or indirect loss or damage, including consequential loss or damage, loss of profits, or loss of chance, claims, demands, proceedings, costs, expenses, awards, judgments and any other liability whatsoever including legal costs and expenses, which may be suffered or incurred, whether in tort (including negligence), contract, breach of statutory duty, equity or otherwise.
3. SMC is exempted from liability for any damages caused by operations not contained in the catalogues and/or instruction manuals, and operations outside of the specification range.
4. SMC is exempted from liability for any loss or damage whatsoever caused by malfunctions of its products when combined with other devices or software.

Series MXS
Specific Product Precautions 1

Be sure to read this before handling. For Safety Instructions, Actuators Precaution, Auto Switches Precautions, refer to "Precautions for Handling Pneumatic Devices" (M-03-E3A)

Selection

⚠ Caution

1. Operate a load within the range of the operating limits.

Operate loads within the range of the operating limits.

When the actuator is used outside the operating limits, excentric loads on the guide will be excessive and this will cause vibration on the guide, in accuracy and shortened life.

2. If intermediate stops by external stopper is done, avoid ejection.

If lurching occurs, damage can result. When making an intermediate stop with an external stopper to be followed by continued forward movement, first supply pressure to momentarily reverse the table, then retract the intermediate stopper, and finally apply pressure to the opposite port to operate the table again.

3. Do not use it in such a way that excessive external force or impact force could work on it.

This could result in damage.

Mounting

⚠ Caution

1. Do not scratch or dent the mounting side of the body, table or end plate.

The damage will result in a decrease in parallelism, vibration of the guide or an increase in moving part resistance.

2. Do not scratch or dent on the forward side of the rail or guide.

This could result in looseness, increased operating resistance, etc.

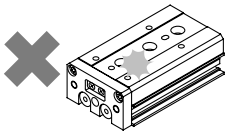

3. Do not apply excessive power and load when work is mounted.

If an external force more than the allowable moment is applied, looseness of the guide unit or increased operating resistance could take place.

4. Flatness of mounting surface should be 0.02 mm or less.

Poor parallelism of the workpiece mounted on the air slide table, the base, and other parts can cause vibration in the guide unit and increased operating resistance, etc.

5. Select the proper connection with the load which has external support and/or guide mechanism on the outside, and align it properly.

6. Avoid contact with the air slide table during operation.

Hands, etc. may get caught in the stroke adjuster. Install a cover as a safety measure if there are instances to be near the slide table during operation.

7. Keep away from objects which are influenced by magnets.

Since an air slide table has magnets built-in, do not allow close contact with magnetic disks, magnetic cards or magnetic tapes. Data may be erased.

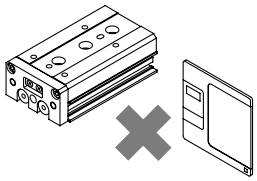

8. Do not attach magnets to the table section.

Since the table is constructed with a magnetic substance, it becomes magnetised when magnets, etc. are attached to it. This may cause malfunction of auto switches, etc.

1. Lateral mounting (Body tapped)

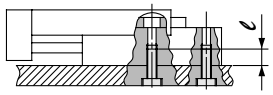

Model	Bolt	Maximum tightening torque (N·m)	Maximum screw-in depth (ℓ mm)
MXS6	M4	2.1	8
MXS8	M4	2.1	8
MXS12	M5	4.4	10
MXS16	M6	7.4	12
MXS20	M6	7.4	12
MXS25	M8	18	16

2. Lateral mounting (Through-hole)

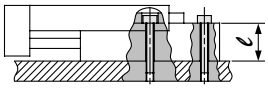

Model	Bolt	Maximum tightening torque (N·m)	Maximum screw-in depth (ℓ mm)
MXS6	M3	1.2	11
MXS8	M3	1.2	13
MXS12	M4	2.8	18.5
MXS16	M5	5.7	24
MXS20	M5	5.7	29
MXS25	M6	10	34

3. Vertical mounting (Body tapped)

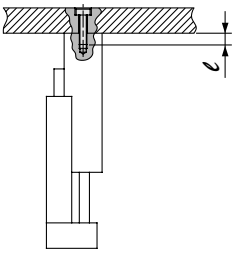

Model	Bolt	Maximum tightening torque (N·m)	Maximum screw-in depth (ℓ mm)
MXS6	M2.5	0.5	3.5
MXS8	M3	0.9	4
MXS12	M4	2.1	6
MXS16	M5	4.4	7
MXS20	M5	4.4	8
MXS25	M6	7.4	10

Series MXS
Specific Product Precautions 2

Be sure to read this before handling. For Safety Instructions, Actuators Precaution, Auto Switches Precautions, refer to "Precautions for Handling Pneumatic Devices" (M-03-E3A)

Mounting

⚠ Caution

1. Front mounting

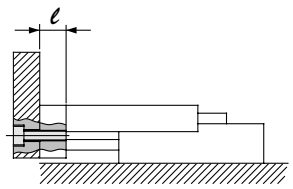

Model	Bolt	Maximum tightening torque (N·m)	Maximum screw-in depth (ℓ mm)
MXS6	M3	0.9	5
MXS8	M4	2.1	6
MXS12	M5	4.4	8
MXS16	M6	7.4	10
MXS20	M6	7.4	13
MXS25	M8	18	15

2. Top mounting

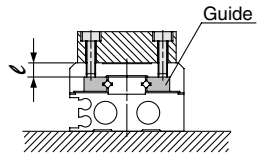

⚠ Caution To prevent the workpiece holding bolts from touching the guide block, use bolts that are at least 0.5 mm shorter than the maximum screw-in depth. If longer bolts are used, they can touch the guide and cause a malfunction.

Model	Bolt	Maximum tightening torque (N·m)	Maximum screw-in depth (ℓ mm)
MXS6	M3	0.9	4
MXS8	M3	0.9	5
MXS12	M4	2.1	5.5
MXS16	M5	4.4	6
MXS20	M5	4.4	10
MXS25	M6	7.4	13

1. The positioning hole on the table and the positioning hole at the bottom of the body do not have the same centre. Use these holes during reinstallation after the table has been removed for the maintenance of an identical product.

Operating Environment

⚠ Caution

1. Do not use in an environment, where the product could be exposed to liquids such as cutting oil, etc.

Using in an environment where the product could be exposed to cutting oil, coolant, oil, etc. could result in looseness, increased operating resistance, air leakage, etc.

2. Do not use in an environment, where the product could be exposed directly to foreign materials such as powder dust, blown dust, cutting chips, spatter, etc.

This could result in looseness and increased operating resistance, and air leakage, etc.
Contact us regarding use in this kind of environment.

3. Do not use in direct sunlight.

4. When there are heat sources in the surrounding area, block them off.

When there are heat sources in the surrounding area, radiated heat may cause the product's temperature to rise and exceed the operating temperature range. Block off the heat with a cover, etc.

5. Do not subject it to excessive vibration and/or impact.

Contact us regarding use in this kind of environment, since this can cause damage or a malfunction.

Caution on Handling Adjuster Option

Stroke Adjuster

⚠ Caution

1. Do not replace with the bolt other than the original adjusting bolt.

This could result in looseness and damage due to impact forces, etc.

2. Refer to the table below for the lock nut tightening torque.

Insufficient torque will cause a decrease in the positioning accuracy.

Model	Tightening torque (N·m)
MXS6	3.0
MXS8	5.0
MXS12	12.5
MXS16	25.0
MXS20	43.0
MXS25	69.0

Caution on Handling Adjuster Option

Stroke Adjuster

⚠ Caution

3. When stroke adjuster is adjusted, do not hit the table with a wrench, etc.

This could result in looseness.

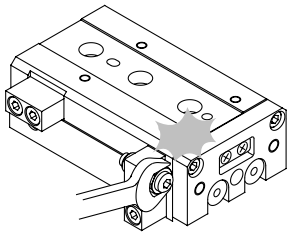

With Shock Absorber

⚠ Caution

1. Do not rotate the set screw on the bottom of shock absorber.

This is not an adjusting screw. Turning it could cause oil leakage.

2. Do not scratch the exposed portion of the piston rod.

Durability could be degraded and the piston rod may not retract.

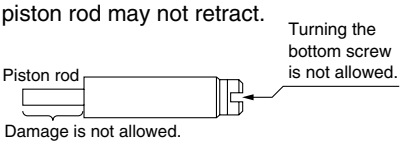

3. Shock absorber is considered a consumable component. When energy absorption has decreased, replace it.

Applicable size	Shock absorber model
MXS8	RB0805
MXS12	RB0806
MXS16	RB1007
MXS20	RB1411
MXS25	RB1412

4. Refer to the table below for the tightening torque of the lock nut for the shock absorber.

Model	Tightening torque (N·m)
MXS8 **MXS12**	1.67
MXS16	3.14
MXS20 **MXS25**	10.8

Specific Product Precautions 3

Be sure to read this before handling. For Safety Instructions, Actuators Precaution, Auto Switches Precautions, refer to "Precautions for Handling Pneumatic Devices" (M-03-E3A)

Caution on Mounting Adjuster Option

Rubber Stopper

⚠ Caution

1. Use caution because the lengths of the mounting bolts for the body and the table are different from each other for some models.

The shock absorber at the extension end (AS) of the MXS6, 8 and 12 has different length hexagon socket head cap screws on the body mounting section and on the table mounting section. Use sufficient care when mounting.

If assembled by making an error in length, it could cause looseness or lead to malfunction.

2. Follow the table below for tightening torque of mounting bolts.

Insufficient torque will cause a decrease in the positioning accuracy and lead to malfunction.

Model	Stroke adjuster at extension end (AS)				Stroke adjuster at retraction end (AT)	
	Body mounting section		Table mounting section			
	Thread size	Tightening torque (N·m)	Thread size	Tightening torque (N·m)	Thread size	Tightening torque (N·m)
MXS6	M2.5 x 10	0.5	M2.5 x 8	0.5	M2.5 x 8	0.5
MXS8	M3 x 12	0.9	M3 x 10	0.9	M3 x 10	0.9
MXS12	M4 x 15	2.1	M4 x 12	2.1	M4 x 8	2.1
MXS16	M5 x 18	4.4	M5 x 18	4.4	M5 x 10	4.4
MXS20	M6 x 20	7.0	M6 x 20	7.0	M5 x 12	4.4
MXS25	M8 x 25	18.0	M8 x 25	18.0	M6 x 16	7.0

Shock Absorber

⚠ Caution

1. Use caution because the lengths of the mounting bolts for the body and the table are different from each other for some models.

The shock absorber at the retraction end (BT) has different length hexagon socket head cap screws on the body mounting section and on the table mounting section. Use sufficient care when mounting.

If assembled by making an error in length, it could cause looseness or lead to malfunction.

2. Follow the table below for tightening torque of mounting bolts.

Insufficient torque will cause a decrease in the positioning accuracy and lead to malfunction.

Model	Shock absorber at extension end (BS)				Shock absorber at retraction end (BT)			
	Body mounting section		Table mounting section		Body mounting section		Table mounting section	
	Thread size	Tightening torque (N·m)	Thread size	Tightening torque (N·m)	Thread size	Tightening torque (N·m)	Thread size	Tightening torque (N·m)
MXS8	M3 x 16	0.9	M3 x 16	0.9	M3 x 12	0.9	M3 x 16	0.9
MXS12	M4 x 15	2.1	M4 x 15	2.1	M4 x 8	2.1	M4 x 15	2.1
MXS16	M5 x 18	4.4	M5 x 18	4.4	M5 x 10	4.4	M5 x 18	4.4
MXS20	M6 x 25	7.0	M6 x 25	7.0	M5 x 12	4.4	M6 x 25	7.0
MXS25	M8 x 25	18.0	M8 x 25	18.0	M6 x 16	7.0	M8 x 25	18.0

Series MXS
Specific Product Precautions 4

Be sure to read this before handling. For Safety Instructions, Actuators Precaution, Auto Switches Precautions, refer to "Precautions for Handling Pneumatic Devices" (M-03-E3A)

Caution on Handling Functional Option

With End Lock

⚠ Caution

1. Use 2 position, 4 or 5 port solenoid valves.

A malfunction may occur with a control circuit that exhausts from both ports, such as exhaust centre 3 position valves.

Recommended pneumatic circuit

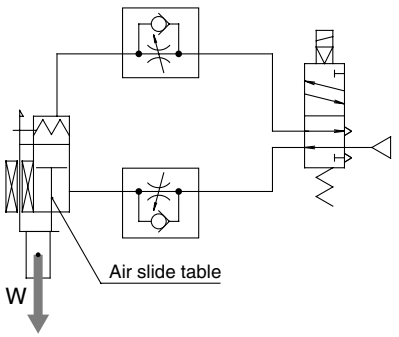

2. Be sure to use meter-out speed control valves.

If used with meter-in speed control or without a speed controller, it may result in malfunction.

3. When releasing the end lock manually, be sure that air pressure is released.

If the end lock is unlocked while the air pressure still remains, it will lead to damage of the workpiece, etc. due to unexpected lurching.

How to Unlock the End Lock

∗ Before proceeding, make sure that there is no residual air pressure.
(1) Push down the lock piston pin.
(2) Slide the table forward.

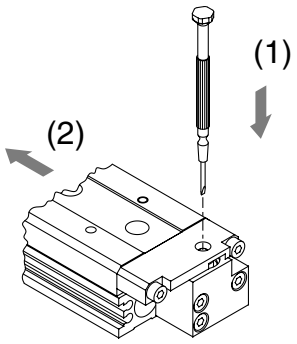

With Buffer Mechanism

⚠ Caution

1. When using the air slide table with buffer, it must be oriented as shown in the sketch below.

In horizontal operation, the buffer may travel the stroke length and activate the auto switch depending on the load and the speed. Therefore, adjust the speed according to the load.

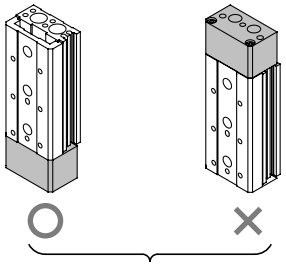

Vertical use

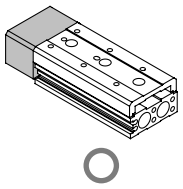

Horizontal use

2. Auto switch with buffer function: For the proper mounting positions for detection at stroke end, refer to the following table.

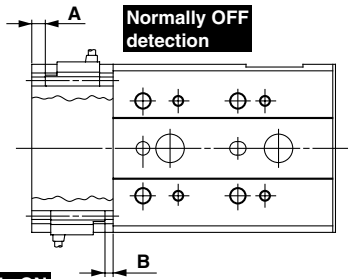

∗ Adjust the switch position according to load and speed.

(mm)

Model	A	B
MXS6	2	3
MXS8	2.5	
MXS12	4	
MXS16	5	
MXS20	5.5	
MXS25	10	

Caution on Handling Symmetric Type

1. Maintain a longer distance than prescribed below if standard style and symmetric style are used side by side.

If the space is insufficient, it may cause auto switches to malfunction.

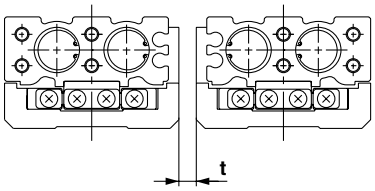

(mm)

Model	Mounting pitch: **t**
MXS6	5
MXS8	10
MXS12	10
MXS16	10
MXS20	15
MXS25	15

Back page 5

EUROPEAN SUBSIDIARIES:

Austria
SMC Pneumatik GmbH (Austria).
Girakstrasse 8, A-2100 Korneuburg
Phone: +43 2262-62280, Fax: +43 2262-62285
E-mail: office@smc.at
http://www.smc.at

Belgium
SMC Pneumatics N.V./S.A.
Nijverheidsstraat 20, B-2160 Wommelgem
Phone: +32 (0)3-355-1464, Fax: +32 (0)3-355-1466
E-mail: post@smcpneumatics.be
http://www.smcpneumatics.be

Bulgaria
SMC Industrial Automation Bulgaria EOOD
16 kliment Ohridski Blvd., fl.13 BG-1756 Sofia
Phone:+359 2 9744492, Fax:+359 2 9744519
E-mail: office@smc.bg
http://www.smc.bg

Croatia
SMC Industrijska automatika d.o.o.
Crnomerec 12, 10000 ZAGREB
Phone: +385 1 377 66 74, Fax: +385 1 377 66 74
E-mail: office@smc.hr
http://www.smceu.com

Czech Republic
SMC Industrial Automation CZ s.r.o.
Hudcova 78a, CZ-61200 Brno
Phone: +420 5 414 24611, Fax: +420 5 412 18034
E-mail: office@smc.cz
http://www.smc.cz

Denmark
SMC Pneumatik A/S
Knudsminde 4B, DK-8300 Odder
Phone: +45 70252900, Fax: +45 70252901
E-mail: smc@smc-pneumatik.dk
http://www.smc-pneumatik.com

Estonia
SMC Pneumatics Estonia OÜ
Laki 12-101, 106 21 Tallinn
Phone: +372 (0)6 593540, Fax: +372 (0)6 593541
E-mail: smc@smcpneumatics.ee
http://www.smcpneumatics.ee

Finland
SMC Pneumatics Finland OY
PL72, Tiistinniityntie 4, SF-02031 ESPOO
Phone: +358 207 513513, Fax: +358 207 513595
E-mail: smcfi@smc.fi
http://www.smc.fi

France
SMC Pneumatique, S.A.
1, Boulevard de Strasbourg, Parc Gustave Eiffel
Bussy Saint Georges F-77607 Marne La Vallee Cedex 3
Phone: +33 (0)1-6476 1000, Fax: +33 (0)1-6476 1010
E-mail: contact@smc-france.fr
http://www.smc-france.fr

Germany
SMC Pneumatik GmbH
Boschring 13-15, D-63329 Egelsbach
Phone: +49 (0)6103-4020, Fax: +49 (0)6103-402139
E-mail: info@smc-pneumatik.de
http://www.smc-pneumatik.de

Greece
S. Parianopoulus S.A.
7, Konstantinoupoleos Street, GR-11855 Athens
Phone: +30 (0)1-3426076, Fax: +30 (0)1-3455578
E-mail: parianos@hol.gr
http://www.smceu.com

Hungary
SMC Hungary Ipari Automatizálási Kft.
Budafoki ut 107-113, H-1117 Budapest
Phone: +36 1 371 1343, Fax: +36 1 371 1344
E-mail: office@smc-automation.hu
http://www.smc-automation.hu

Ireland
SMC Pneumatics (Ireland) Ltd.
2002 Citywest Business Campus, Naas Road, Saggart, Co. Dublin
Phone: +353 (0)1-403 9000, Fax: +353 (0)1-464-0500
E-mail: sales@smcpneumatics.ie
http://www.smcpneumatics.ie

Italy
SMC Italia S.p.A
Via Garibaldi 62, I-20061Carugate, (Milano)
Phone: +39 (0)2-92711, Fax: +39 (0)2-9271365
E-mail: mailbox@smcitalia.it
http://www.smcitalia.it

Latvia
SMC Pneumatics Latvia SIA
Smerla 1-705, Riga LV-1006, Latvia
Phone: +371 781-77-00, Fax: +371 781-77-01
E-mail: info@smclv.lv
http://www.smclv.lv

Lithuania
SMC Pneumatics Lietuva, UAB
Savanoriu pr. 180, LT-01354 Vilnius, Lithuania
Phone: +370 5 264 81 26, Fax: +370 5 264 81 26

Netherlands
SMC Pneumatics BV
De Ruyterkade 120, NL-1011 AB Amsterdam
Phone: +31 (0)20-5318888, Fax: +31 (0)20-5318880
E-mail: info@smcpneumatics.nl
http://www.smcpneumatics.nl

Norway
SMC Pneumatics Norway A/S
Vollsveien 13 C, Granfos Næringspark N-1366 Lysaker
Tel: +47 67 12 90 20, Fax: +47 67 12 90 21
E-mail: post@smc-norge.no
http://www.smc-norge.no

Poland
SMC Industrial Automation Polska Sp.z.o.o.
ul. Konstruktorska 11A, PL-02-673 Warszawa,
Phone: +48 22 548 5085, Fax: +48 22 548 5087
E-mail: office@smc.pl
http://www.smc.pl

Portugal
SMC Sucursal Portugal, S.A.
Rua de Engº Ferreira Dias 452, 4100-246 Porto
Phone: +351 22-610-89-22, Fax: +351 22-610-89-36
E-mail: postpt@smc.smces.es
http://www.smces.es

Romania
SMC Romania srl
Str Frunzei 29, Sector 2, Bucharest
Phone: +40 213205111, Fax: +40 213261489
E-mail: smcromania@smcromania.ro
http://www.smcromania.ro

Russia
SMC Pneumatik LLC.
4B Sverdlovskaja nab, St. Petersburg 195009
Phone.:+812 718 5445, Fax:+812 718 5449
E-mail: info@smc-pneumatik.ru
http://www.smc-pneumatik.ru

Slovakia
SMC Priemyselná Automatizáciá, s.r.o.
Námestie Martina Benku 10, SK-81107 Bratislava
Phone: +421 2 444 56725, Fax: +421 2 444 56028
E-mail: office@smc.sk
http://www.smc.sk

Slovenia
SMC industrijska Avtomatika d.o.o.
Grajski trg 15, SLO-8360 Zuzemberk
Phone: +386 738 85240 Fax: +386 738 85249
E-mail: office@smc-ind-avtom.si
http://www.smc-ind-avtom.si

Spain
SMC España, S.A.
Zuazobidea 14, 01015 Vitoria
Phone: +34 945-184 100, Fax: +34 945-184 124
E-mail: post@smc.smces.es
http://www.smces.es

Sweden
SMC Pneumatics Sweden AB
Ekhagsvägen 29-31, S-141 71 Huddinge
Phone: +46 (0)8-603 12 00, Fax: +46 (0)8-603 12 90
E-mail: post@smcpneumatics.se
http://www.smc.nu

Switzerland
SMC Pneumatik AG
Dorfstrasse 7, CH-8484 Weisslingen
Phone: +41 (0)52-396-3131, Fax: +41 (0)52-396-3191
E-mail: info@smc.ch
http://www.smc.ch

Turkey
Entek Pnömatik San. ve Tic Ltd. Sti.
Perpa Tic. Merkezi Kat: 11 No: 1625, TR-80270 Okmeydani Istanbul
Phone: +90 (0)212-221-1512, Fax: +90 (0)212-221-1519
E-mail: smc-entek@entek.com.tr
http://www.entek.com.tr

UK
SMC Pneumatics (UK) Ltd
Vincent Avenue, Crownhill, Milton Keynes, MK8 0AN
Phone: +44 (0)800 1382930 Fax: +44 (0)1908-555064
E-mail: sales@smcpneumatics.co.uk
http://www.smcpneumatics.co.uk

OTHER SUBSIDIARIES WORLDWIDE:

ARGENTINA, AUSTRALIA, BOLIVIA, BRASIL, CANADA, CHILE, CHINA, HONG KONG, INDIA, INDONESIA, MALAYSIA, MEXICO, NEW ZEALAND, PHILIPPINES, SINGAPORE, SOUTH KOREA, TAIWAN, THAILAND, USA, VENEZUELA

http://www.smceu.com
http://www.smcworld.com

SMC CORPORATION 1-16-4 Shimbashi, Minato-ku, Tokio 105 JAPAN; Phone:03-3502-2740 Fax:03-3508-2480

1st printing **JX** printing **JX 30 UK** **Printed in Spain**

Specifications are subject to change without prior notice and any obligation on the part of the manufacturer.