YASKAWA

COMPACT INVERTER SERIES
J1000



EN
DE
ES
FR
IT

J1000
J1000
J1000
J1000

THE J-TYPE
YASKAWA INVERTER DRIVE TECHNOLOGY

Contents

- **Page 2**
  Experience & Innovation
  A leader in Inverter Drives technology
- **Page 3**
  Features & Functions
- **Page 4**
  Specifications & Ratings
- **Page 5**
  Connection Diagram
- **Page 6**
  Model Code & Dimensions
- **Page 7**
  Dimensions & Options

Experience & Innovation

For more than 90 years YASKAWA has been manufacturing and supplying mechatronic products for machine building and industrial automation.

Its standard products as well as tailor-made solutions are famous and have a high reputation for outstanding quality and durability.

A leader in Inverter Drives technology

Extensive research and development has allowed YASKAWA to remain at the forefront of motion control and automation technology. This technological leadership has helped to modernise industries such as mining, steel, pulp and paper, chemical, automotive, packaging, machine tool and semiconductor.

The famous YASKAWA reliability is now available in an even smaller and more powerful unit.

J1000 is fully capable of efficient performance and energy saving, handling variable speed needs in compact applications.



The J1000 cutting-edge features such as:

- V/f Control
- Plug'n Play installation
- Over-Excitation Braking
- Easy parameter programming and controller functions
- Braking Chopper built in
- Heavy duty / normal duty rating
- International standards
- Swing PWM for silent motor operation





Features & Functions

Focus on application

Customer orientation and application focus – two attributes of machine equipment YASKAWA offers with its J1000 compact inverter drive series.

The J1000 meets all automation requirements for compact applications with variable speed operation and energy saving characteristics. A wide range of useful functions upgrade your machine and offer great potentials.

The concept of small size and easy handling with the famous YASKAWA reliability makes the J1000 an alternative in the drive market not only cost wise.

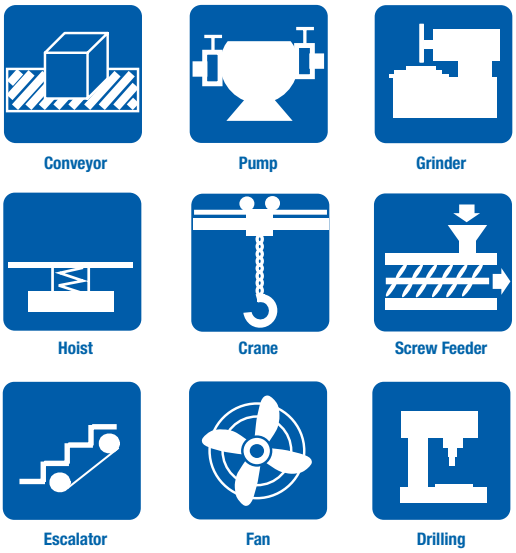

YASKAWA J1000 Features & Functions

Performance

- Outstanding power to size ratio and gapless side-by-side installation reduce the mounting space to a minimum.
- International Standards – RoHS, CE, cUL, UL compliance.
- High Torque Performance – Detects load and automatically adjusts torque regardless the actual speed conditions.
- Speed Search for smooth start of coasting motors
- Stall prevention for reliable handling of overload conditions

Functions

- J1000 automatically sets parameters needed for major applications. The same easily unterstandable parameter structure like in other YASKAWA 1000 series drives allows hassle free setup in shortest time.
- Parameter Verify. Lists changed settings.
- Built-in Digital Operator with 5-digit display
- Small Design – Big Power:
  J1000 can handle 150% overload for 1 minute to satisfy Heavy Duty applications. In Normal Duty mode it runs a one size larger motor and contributes to small and cost effective machine design.
- Drive Wizard Plus – Freely available parameter set-up and maintenance tool.

Options

- Parameter Copy Unit
- LED and LCD Remote Operator
- Serial Communication Option – Compatible with RS-422/485 Interface for MEMOBUS communication.
- Speed Potentiometer
- EMC-Filter
- Braking Resistors



Specifications & Ratings

		Specifications
Control Characteristics	Control methods	V/f Control
	Frequency Control Range	0.01 to 400 Hz
	Frequency Accuracy	Digital input: within ±0.01% of the max. output frequency (–10°C to +50°C)
		Analog input: within ±0.5% of the max. output frequency (25°C ±10°C)
	Frequency Setting Resolution	Digital input: 0.01 Hz
		Analog input: 1/1000 of max. frequency
	Starting Torque	150% / 3 Hz
	Speed Control Range	1:20
	Main Control Functions	Momentary power loss ride-thru, Speed search, Multi-Step Speed (max. 9 steps), Accel/decel time switch, S-curve accel/decel, 3-wire sequence, Cooling fan on/off, Slip compensation, Torque compensation, Frequency jump, Upper/lower limits for frequency reference, DC injection braking at start and stop, Overexcitation braking, Fault restart, Motor stall prevention ...
Protection Function	Motor Protection	Motor overheat protection based on output current
	Momentary Overcurrent Protection	Drive stops when output current exceeds 200% of Heavy Duty Rating
	Overload Protection	120% for 60 sec at normal duty, 150% for 60 sec at Heavy Duty
	Overvoltage Protection	200 V class: Stops when DC bus exceeds approx. 410 V, 400 V class: Stops when DC bus exceeds approx. 820 V
	Undervoltage Protection	Stops when DC bus voltage falls below the following levels: 190 V (3-phase 200 V), 160 V (single-phase 200 V), 380 V (3-phase 400 V), 350 V (3-phase 380 V)
	Drive Overheat Protection	Protected by thermistor
Operating Environment	Area of Use	Indoors
	Ambient Temperature	-10 to +50°C (IP20 open chassis)
	Humidity	95 RH% or less (no condensation)
	Storage Temperature	-20 to +60°C (short-term temperature during transportation)
	Altitude	Max. 1000 m (output derating of 1% per 100 m above 1000 m, max. 3000 m)
	Shock	10 to 20 Hz (9.8 m/s^2) max., 20 to 55 Hz (5.9 m/s^2) max.
Standards		CE, UL, cUL, RoHS

Voltage class		200 V						
Inverter Model	Three Phase Inverter CIMR-JC2A	0001	0002	0004	0006	0010	0012	0020
	Single Phase Inverter CIMR-JCBA	0001	0002	0003	0006	0010	–	–
Inverter output	Motor output kW at normal duty	0.2	0.4	0.75	1.1	2.2	3.0	5.5
	Motor output kW at heavy duty	0.1	0.2	0.4	0.75	1.5	2.2	4.0
	Rated output current at normal duty [A]*1	1.2	1.9	3.5 (3.3)	6.0	9.6	12.0	19.6
	Rated output current at heavy duty [A]	0.8*2	1.6*2	3*2	5.0*2	8.0*3	11.0*3	17.5*3
	Rated output power at normal duty [kVA]*1	0.5	0.7	1.3	2.3	3.7	4.6	7.5
	Rated output power at heavy duty [kVA]	0.3	0.6	1.1	1.9	3.0	4.2	6.7
	Max. output voltage	Single and Three-phase power supply: three-phase 200 to 240 V (relative to input voltage)						
	Max. output frequency	400 Hz						
Inverter input	Rated input voltage	Three-phase 200 to 240 V +10%/-15% , Single-phase 200 to 240 V +10%/-15%						
	Rated input frequency	50/60 Hz, ±5%						

Voltage class		400 V						
Inverter Model	Three Phase Inverter CIMR-JC4A	0001	0002	0004	0005	0007	0009	0011
Inverter output	Motor output kW at normal duty	0.4	0.75	1.5	2.2	3.0	3.7	5.5
	Motor output kW at heavy duty	0.2	0.4	0.75	1.5	2.2	3.0	3.7
	Rated output current at normal duty*1 [A]	1.2	2.1	4.1	5.4	6.9	8.8	11.1
	Rated output current at heavy duty*3 [A]	1.2	1.8	3.4	4.8	5.5	7.2	9.2
	Rated output power at normal duty*1 [kVA]	0.9	1.6	3.1	4.1	5.3	6.7	8.5
	Rated output power at heavy duty*3 [kVA]	0.9	1.4	2.6	3.7	4.2	5.5	7.0
	Max. output voltage	Three-phase 380 to 480 V (proportional to input voltage)						
	Max. output frequency	400 Hz						
Inverter input	Rated input voltage	Three-phase 380 to 480 V +10%/-15%						
	Rated input frequency	50/60 Hz +/-5%						

*1 This value assumes a carrier frequency of 2 kHz to Swing PWM. Increasing the carrier frequency requires a reduction in current.

*2 This value assumes a carrier frequency of 10 kHz. Increasing the carrier frequency requires a reduction in current.

*3 This value assumes a carrier frequency of 8 kHz. Increasing the carrier frequency requires a reduction in current.



Connection Diagram

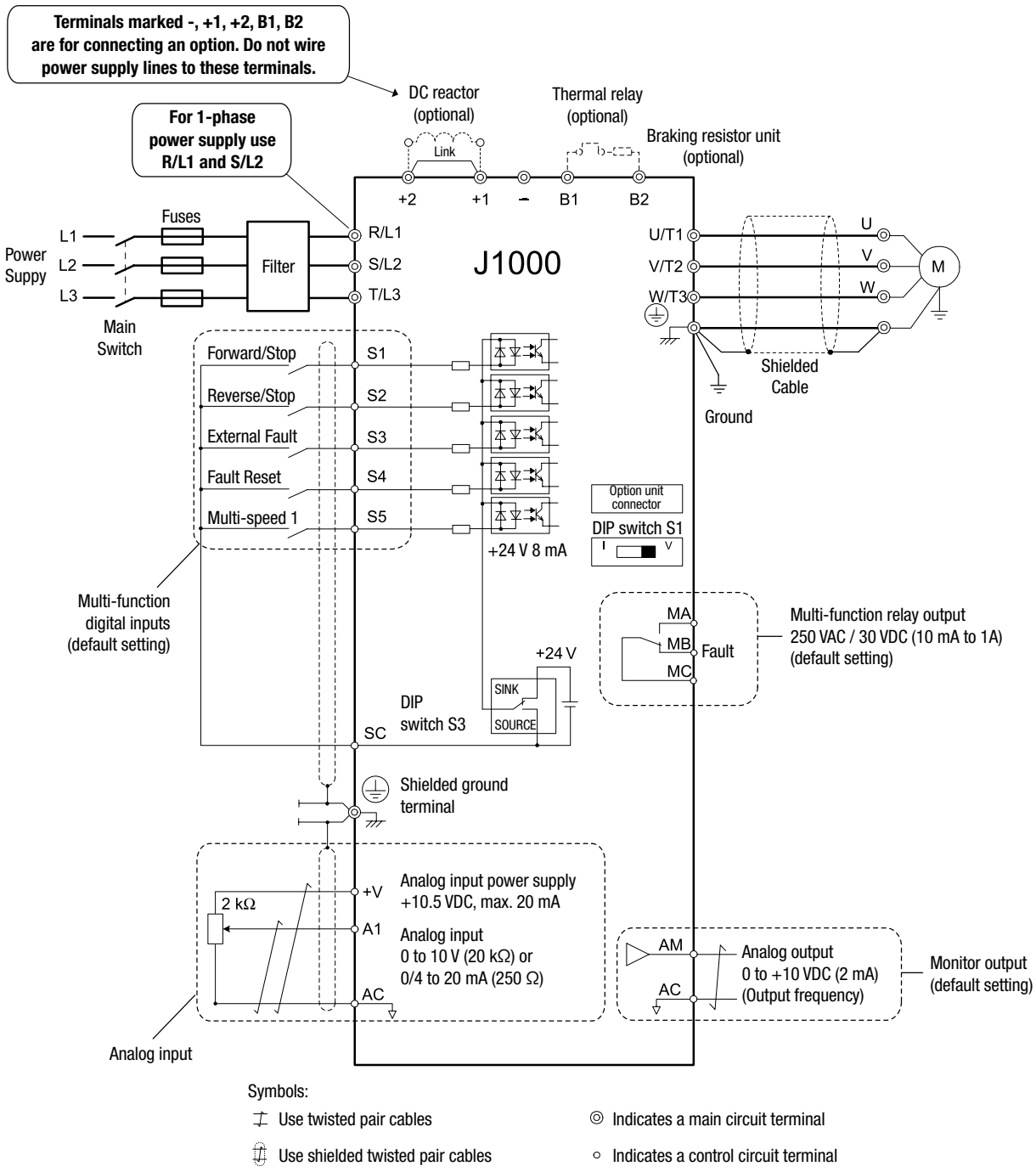

Symbols:

- Use twisted pair cables
- Use shielded twisted pair cables
- Indicates a main circuit terminal
- Indicates a control circuit terminal



Model Code & Dimensions

CIMR- J C B A 0001 B A A

Inverter Series	
J1000	J

Specification	
European specification	C

Input Voltage	
Single-phase 230 VAC	B
Three-phase 230 VAC	2
Three-phase 400 VAC	4

Customer Specification	
Standard	A

Inverter Model No.
0001 to 0020

Type		
Fin	Protection level	
Standard	IP20 without top cover	B
No	Finless (IP20)	J

Coating Specification and Protection	
Standard A	A

Version	
1st	A

Enclosures

Standard J1000 uses IP20 design.

IP20 Enclosure, Standard Cooler

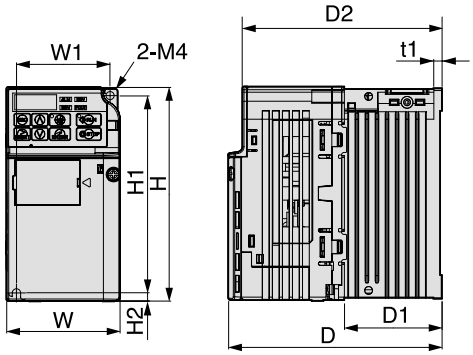

Fig. 1

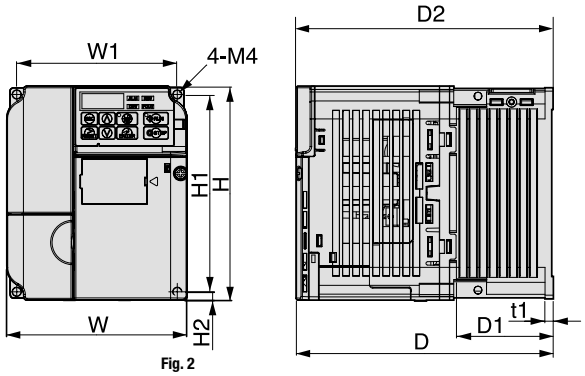

Fig. 2

Voltage Class	Drive Model CIMR-JC□	Figure	Dimensions in mm									Weight (kg)	Cooling
			W	H	D	W1	H1	H2	D1	D2	t1		
Single-Phase 200 V Class	BA0001B	1	68	128	76	56	118	5	6.5	67.5	3	0.6	Self-cooled
	BA0002B				76				6.5	67.5	3	0.6	
	BA0003B				118				38.5	109.5	5	1.0	
	BA0006B	2	108	128	137.5	96	118	5	58	129	5	1.7	
	BA0010B				154				58	145.5	5	1.8	Fan cooled
Three-Phase 200 V Class	2A0001B	1	68	128	76	56	118	5	6.5	67.5	3	0.6	Self-cooled
	2A0002B				76				6.5	67.5	3	0.6	
	2A0004B				108				38.5	99.5	5	0.9	
	2A0006B				128				58.5	119.5	5	1.1	Fan cooled
	2A0010B	2	108	128	129	96	118	5	58	120.5	5	1.7	
	2A0012B		108		137.5	96			58	129	5	1.7	
	2A0020B		140		143	128			65	134.5	5	2.4	
Three-Phase 400 V class	4A0001B	2	108	128	81	96	118	5	10	72.5	5	1.0	Self-cooled
	4A0002B		108		99	96			28	90.5	5	1.2	
	4A0004B		108		137.5	96			58	129	5	1.7	
	4A0005B		108		154	96			58	145.5	5	1.7	Fan cooled
	4A0007B		108		154	96			58	145.5	5	1.7	
	4A0009B		108		154	96			58	145.5	5	1.7	
	4A0011B		140		143	128			65	134.5	5	2.4	

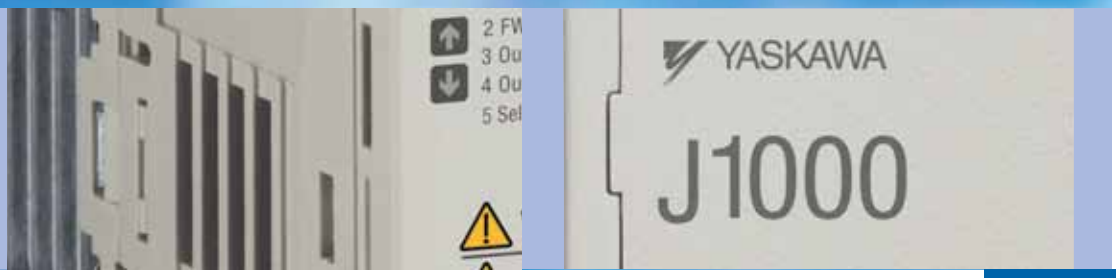

Dimensions & Options

IP20 Enclosure, Finless

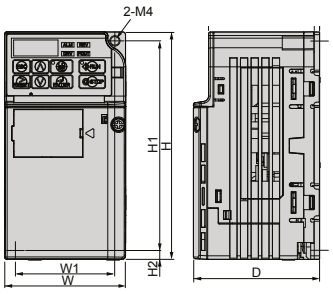

Fig. 1

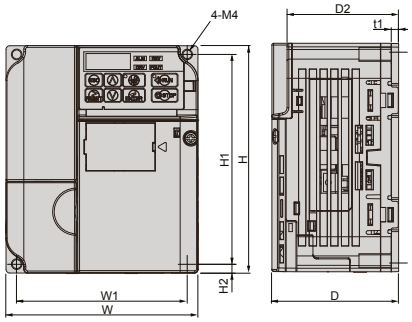

Fig. 2

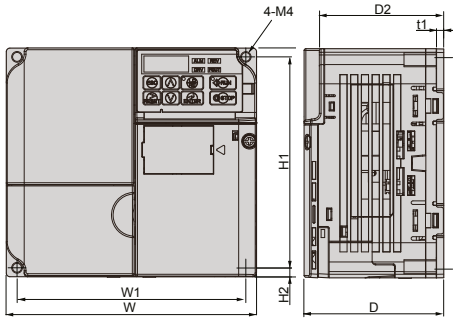

Fig. 3

Voltage Class	Drive Model CIMR-JC□	Figure	Dimensions in mm								Weight (kg)
			W	H	D	W1	H1	H2	D2	t1	
Single-Phase 200 V Class	BA0001J	1	68	128	71	56	118	5	62.5	3	0.6
	BA0002J				71				62.5		0.6
	BA0003J				81				72.5		0.8
	BA0006J	2	108	128	76	56	118	5	67.5	4	0.6
	BA0010J								67.5		0.6
Three-Phase 200 V Class	2A0001J	1	68	128	71	56	118	5	62.5	3	0.6
	2A0002J										0.6
	2A0004J										0.7
	2A0006J										0.7
	2A0008J	2	108	128	71	96	118	5	62.5	4	1.0
	2A0010J				71				62.5		1.0
	2A0012J				79.5				71.0		1.0
	2A0018J	3	140	128	78	128	118	5	69.5	4	1.3
	2A0020J										1.3
Three-Phase 400 V Class	4A0001J	2	108	128	71	96	118	5	62.5	4	0.9
	4A0002J				71				62.5		0.9
	4A0004J				79.5				71.0		1.0
	4A0005J				96				87.5		1.0
	4A0007J				96				87.5		1.1
	4A0009J				96				87.5		1.1
	4A0011J	3	140	128	78	128	118	5	69.5	4	1.3

Options

- Parameter Copy Unit
- LED and LCD Remote Operator
- Serial Communication Interfaces for MEMOBUS/Modbus, RS232, RS422/RS485 up to 115.2 kBaud
- Speed Potentiometer
- EMC-Filter
- Braking Resistors

YASKAWA Europe GmbH
Drives & Motion Division
Hauptstr. 185
65760 Eschborn
Germany

Tel: +49 (0) 6196 569-300
Fax: +49 (0) 6196 569-399
info@yaskawa.eu.com
www.yaskawa.eu.com



Specifications are subject to change without notice
for ongoing product modifications and improvements.
© YASKAWA Europe GmbH. All rights reserved.

Literature No. YEU_INV_J1000_EN_v6_1011
Printed in Germany October 2011