YASKAWA

A World of Automation Solutions™



SGMCS Direct Drive Sigma Series Servo Product Catalog

Introduction



For your ideal machine, you need a compact servo drive with high torque and high accuracy. Your dream can come true with Yaskawa's gearless, Direct Drive Sigma Series.

Use a direct drive to supply high torque at low speeds, obtain precise positioning at high speeds without any slippage and backlash. Simplify your machine's configuration and maintenance requirements by eliminating the drivetrain. Use Yaskawa's Sigma Series of gearless Direct Drives to make your ideal machine a reality.

Applications

With a wide variety of products in our lineup, you have an expanded range of applications from which to choose.

Plastic Machinery

- Dial tables
- Die actuators
- Stretch wrap carousel
- Clamps
- Side-action tools
- Rotational casting mandrel

Semiconductor Manufacturing

- Integrated circuit inspection
- Liquid crystal screen manufacture
- Electronic parts assembly
- IC handling
- Manipulators

Machine Tools

- Transfer stations
- Dial tables
- Tool changer carousels
- Table drives

Packaging Machinery

- Part unloaders
- Actuators
- Rotary tables
- Material handling

Converting Equipment

- Print registration stands

More Powerful with Higher Positioning Accuracy

High Torque and High Speed

- A high-torque operation is realized without gears. Instantaneous peak torque: 6 to 600 Nm
- A high-speed operation reduces cycle time. Maximum motor speed: 250 to 500 RPM

High Precision

- High-precision indexing of 1,000,000 PPR is available
- Absolute accuracy of ±15 arc seconds or less, repeatability of ±1.3 arc seconds or less
- No backlash means that a high-precision, high-speed operation with shorter settling times is possible
- A current control algorithm with conversions for the d-q axis realizes higher accuracy in torque control

Simplified Machine Structure, Adjustment, and Maintenance

Compact

- The size of the machine's drive section is reduced because of the unique motor design
- The hollow space in the motor center can be used for wiring and piping

Easy

- Smooth and noiseless drive
- Use of serial encoder reduces the amount of wiring
- Parameters are used to change the type of control being used: speed control, torque control, or positioning control

Direct Drive System - Technical Improvements

- Simplified machine construction
- Improved positioning accuracy
- Direct connection to load increases torsional stiffness
- Backlash free operation
- High dynamic load reversals without damaging components
- Low noise
- No maintenance for lubrication - ideal for clean room applications
- Compact design for reduced space requirement
- Easy wiring and piping using the motor's hollow design
- Provides programmable motion profiles
- Delivers holding torque at zero speed – direct drive motors can provide 300% of continuous torque
- Includes integral I/O control

Product Lineup

- Small-capacity



SGMCS Servomotor



SGDH
SERVOPACK

Outer diameter: 135 mm, Inner diameter: 20 mm

Single-phase 200V

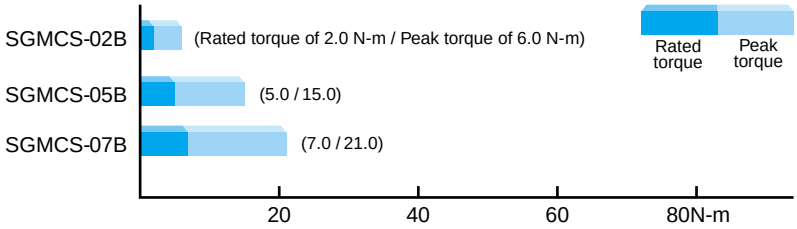

SGDH-02
(200W)

Outer diameter: 175 mm, Inner diameter: 35 mm

Single-phase 200V

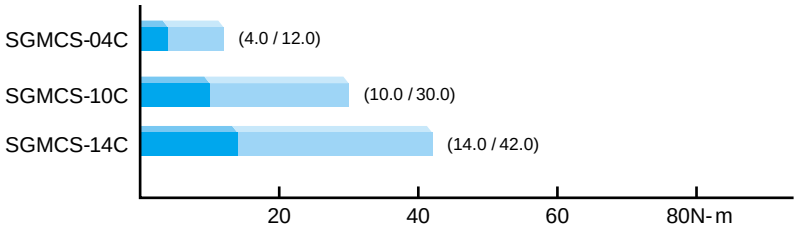

SGDH-04
(400W)

Outer diameter: 230 mm, Inner diameter: 60 mm

Single-phase 200V

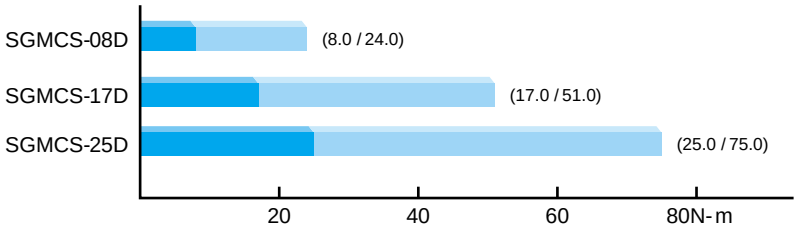

SGDH-04
(400W)

Outer diameter: 290 mm, Inner diameter: 75 mm

Three-phase 200V

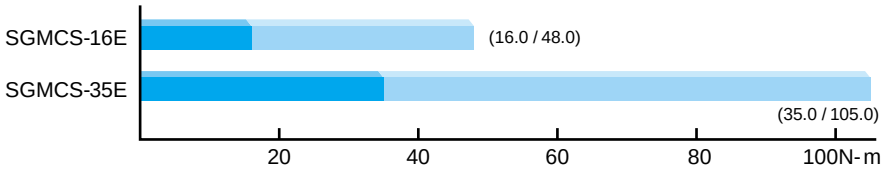

SGDH-08
(750W)

- Medium-capacity



SGMCS Servomotor



SGDH
SERVOPACK

Outer diameter: 280 mm, Inner diameter: 75 mm

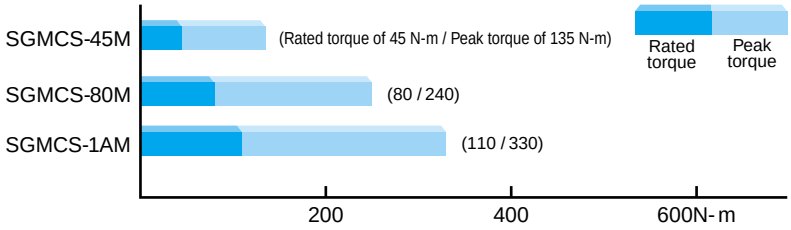

Three-phase 200V

SGDH-10 (1.0kW)
SGDH-15 (1.5kW)
SGDH-20 (2.0kW)

Outer diameter: 360 mm, Inner diameter: 118 mm

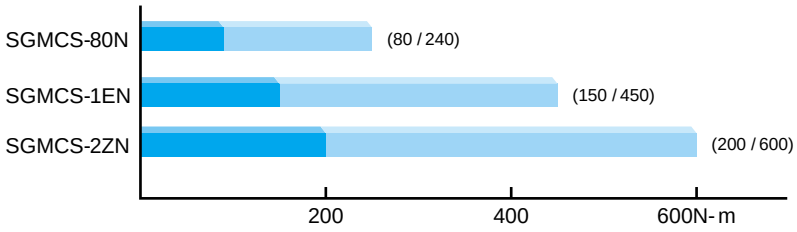

Three-phase 200V

SGDH-15 (1.5kW)
SGDH-30 (3.0kW)
SGDH-30 (3.0kW)

Type Designation

Servomotor

SGMCS - 04 C 3 B 1 1

Direct Drive Servomotor

Rated Torque

02: 2Nm	17: 17Nm
04: 4Nm	25: 25Nm
05: 5Nm	35: 35Nm
07: 7Nm	45: 45Nm
08: 8Nm	80: 80Nm
10: 10Nm	1A: 110Nm
14: 14Nm	1E: 150Nm
16: 16Nm	2Z: 200Nm

Motor Outer Diameter

B: 135mm
C: 175mm
D: 230mm
E: 290mm
M: 280mm
N: 360mm

Encoder Specifications
3: 20-bit absolute* (Standard)

Design Revision Order
Blank, A, B

Flange Specifications
1: Back side only base mount (sm cap)
3: Front or back side base mount (med cap)

Optional Specifications
1: Standard

* : Within one rotation. Can be used in applications requiring incremental.

SERVOPACK

SGDH

SGDH - 02 A E

SGDH SERVOPACK (Extended function)

Maximum Applicable Servomotor Capacity

02: 200W	10: 1.0kW
04: 400W	15: 1.5kW
08: 750W	20: 2.0kW
	30: 3.0kW

Supply Voltage
A: 200VAC

Model
E: Speed, torque, positioning control

System Configuration

Refer to pages 20 to 24 for details of peripheral devices, connectors, and cables.

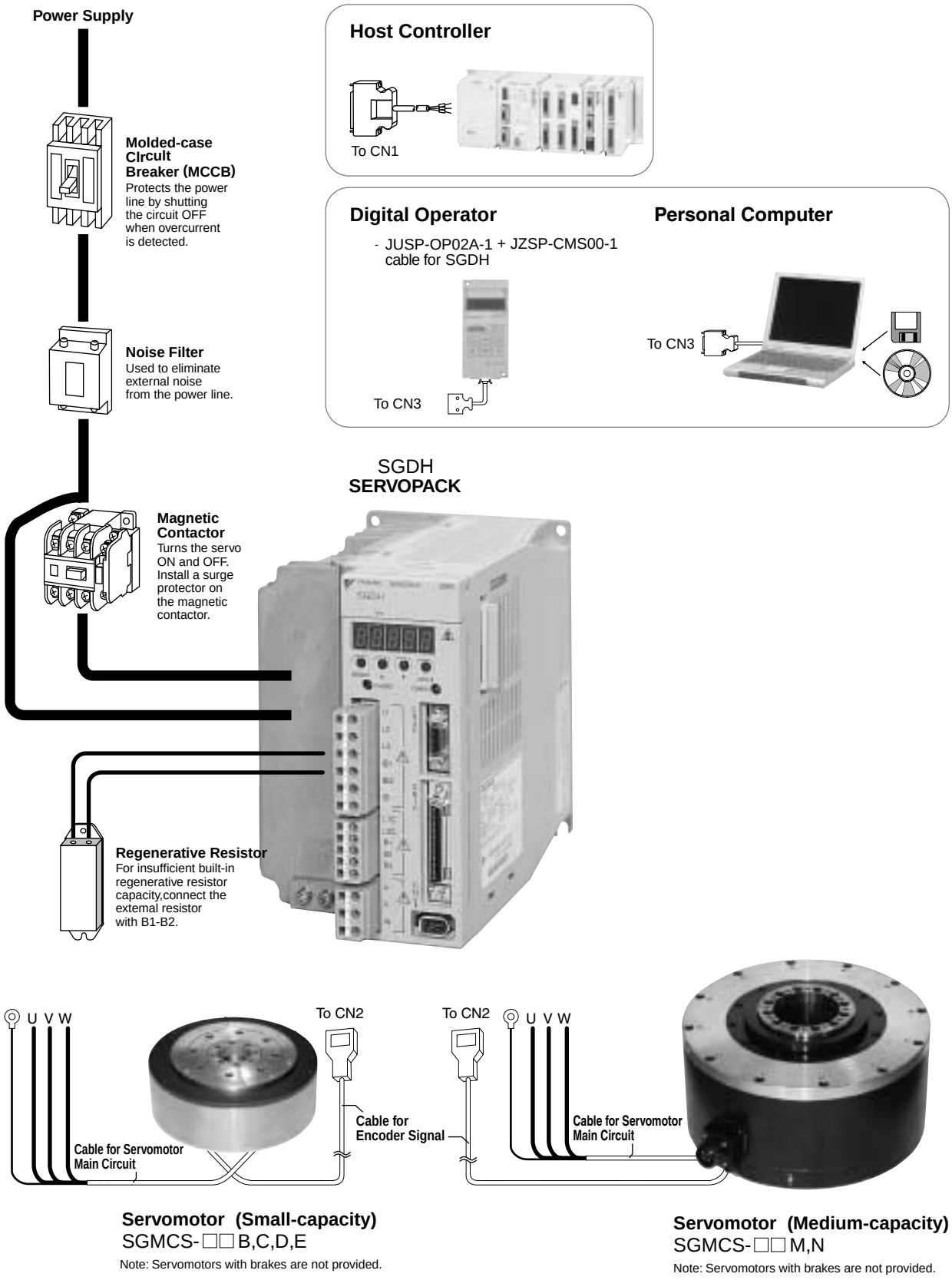

Servomotor (Small-capacity)
SGMCS-□□B,C,D,E
Note: Servomotors with brakes are not provided.

Servomotor (Medium-capacity)
SGMCS-□□M,N
Note: Servomotors with brakes are not provided.

Servomotors (Small-capacity)

- Ratings and Specifications

Time Rating	Continuous	**Ambient Temperature**	0 to +40℃
Thermal Class	A	**Ambient Humidity**	20 to 80% RH (non-condensing)
Withstand Voltage	1500VAC, 1min	**Excitation Format**	Permanent magnet
Insulation Resistance	500VDC, 10MΩ or more	**Drive Method**	Direct drive
Enclosure	Totally-enclosed,self-cooled	**Mounting Method**	Flange-mounted
Vibration Resistance	V15	**Enclosure Rating**	IP42

Servomotor Type		SGMCS-□□B□B			SGMCS-□□C□B			SGMCS-□□D□B			SGMCS-□□E□B	
		02	05	07	04	10	14	08	17	25	16	35
Rated Output *1	W	42	105	147	84	209	293	168	356	393	335	550
Rated Torque *1 *2	N-m	2.00	5.00	7.00	4.00	10.0	14.0	8.00	17.0	25.0	16.0	35.0
Instantaneous Peak Torque *1	N-m	6.00	15.00	21.0	12.0	30.0	42.0	24.0	51.0	75.0	48.0	105
Stall torque *1 (60min -1)	N-m	2.05	5.15	7.32	4.15	10.4	14.9	8.64	19.2	27.2	17.6	38.3
Rated Current *1	Arms	1.8	1.8	1.4	2.1	2.0	2.0	2.0	2.3	2.7	3.3	3.5
Instantaneous Max.Current *1	Arms	5.1	5.1	4.1	6.0	5.8	5.9	5.9	6.6	7.9	9.4	10.0
Rated Speed *1	min^{-1}	200			200			200		150	200	150
Max. Speed *1	min^{-1}	500			500	400	300	500	350	250	500	250
Torque Constant	N-m/Arms	1.28	3.12	5.51	2.16	5.56	7.60	4.46	8.28	10.3	5.58	11.1
Rotor Moment of Inertia	kg-m^2 x 10^{-4}	25.0	51.0	77.0	77.0	140	220	285	510	750	930	1430
Rated Power Rate *1	kW/s	1.60	4.90	6.36	2.08	7.14	8.91	2.25	5.67	8.33	2.75	8.57
Rated Angular Acceleration *1	rad/s^2	800	980	910	520	710	640	280	330	330	170	240
Absolute Accuracy	arc-sec	± 15			± 15			± 15			± 15	
Repeat Accuracy	arc-sec	± 1.3			± 1.3			± 1.3			± 1.3	

*1 These values and the Torque/Speed characteristics listed here are representative of the values obtained when the motor is driven from the SERVOPACK and the coil temperature is at 100℃. All others are for a coil temperature of 20℃

*2 These values for the Rated Torque are for the continuous allowable torque with the following heatsinks at an ambient temperature of 40℃.
Heatsink dimensions: SGMCS-□□B 350 x 350 x 12mm, SGMCS-□□C 450 x 450 x 12mm,
SGMCS-□□D 550 x 550 x 12mm, SGMCS-□□E 650 x 650 x 12mm

- Torque / Speed Characteristics

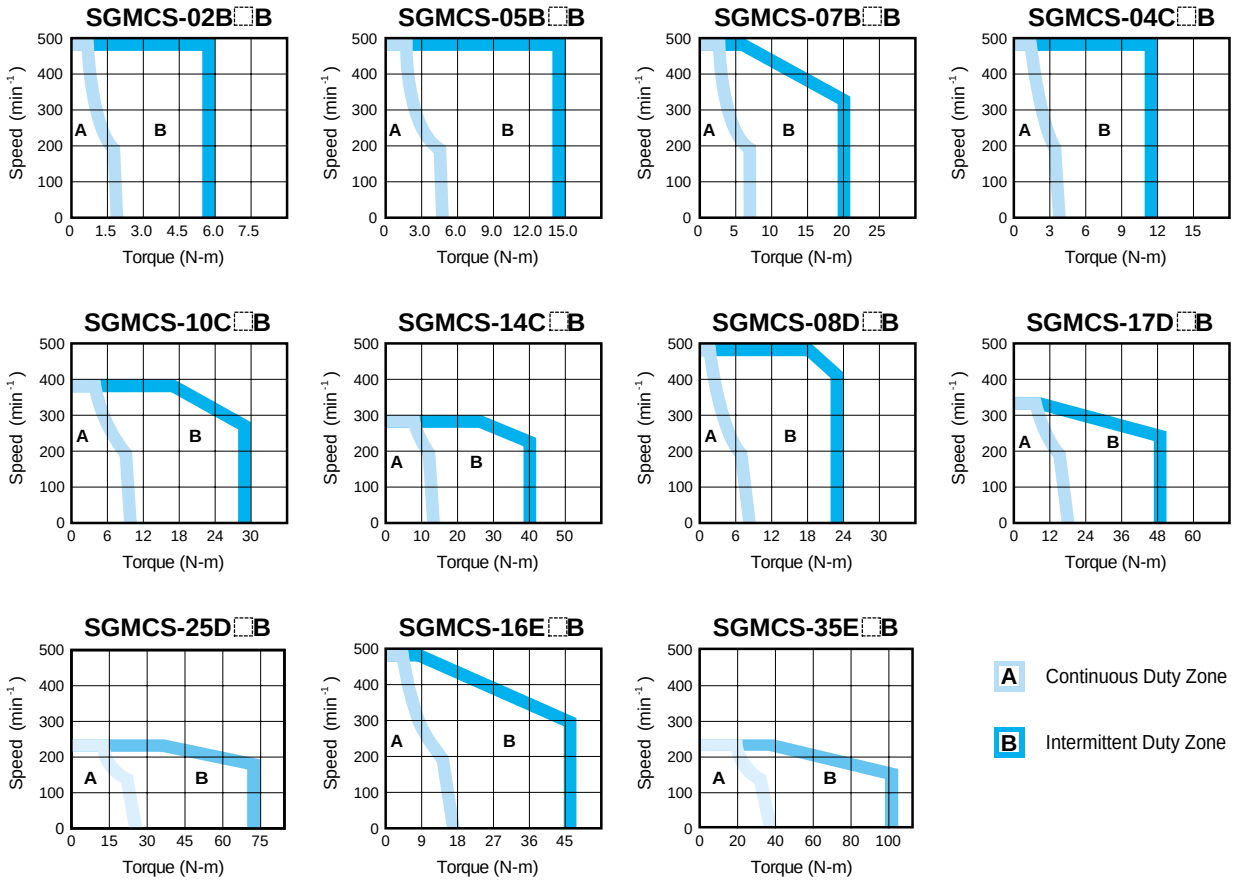

- Dimensions Units : mm

Rotating part

SGMCS-02B□B

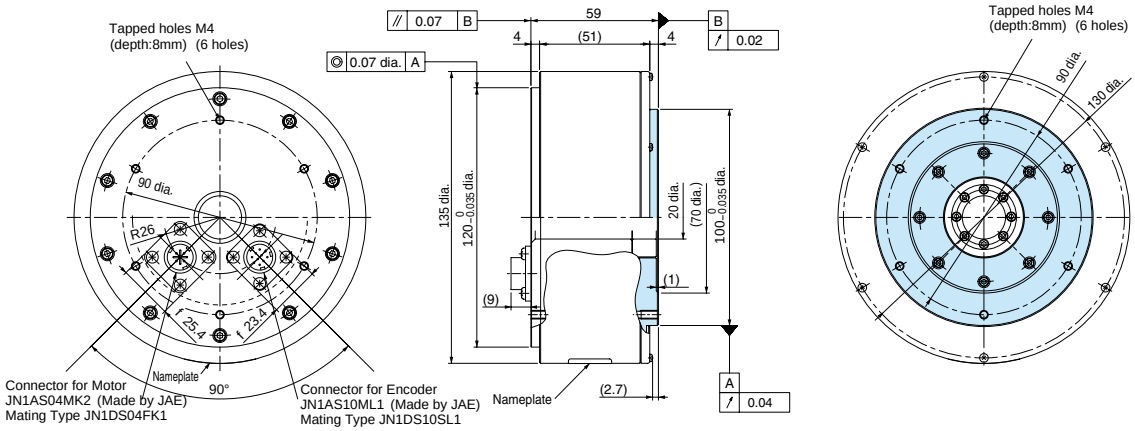

Approx.mass: 5.0kg

SGMCS-05B□B

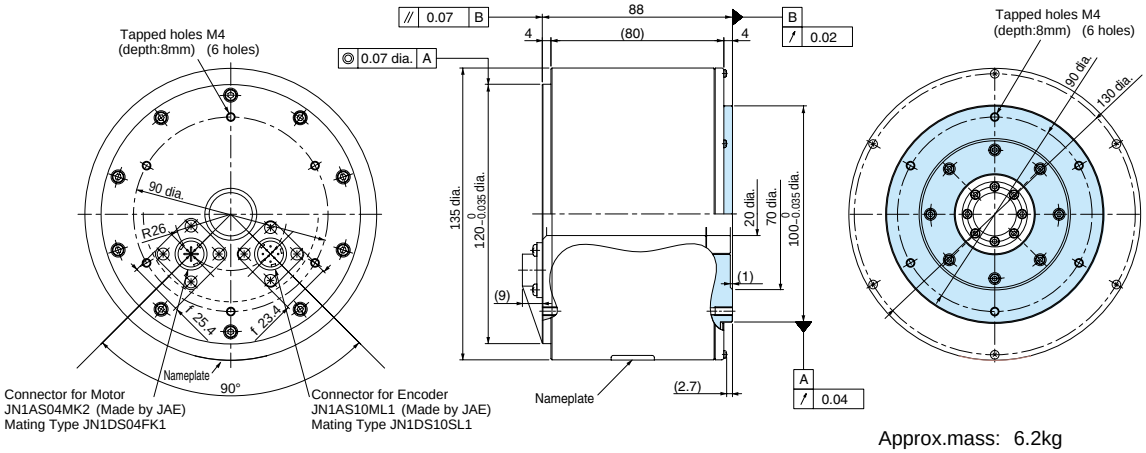

Approx.mass: 6.2kg

SGMCS-07B□B

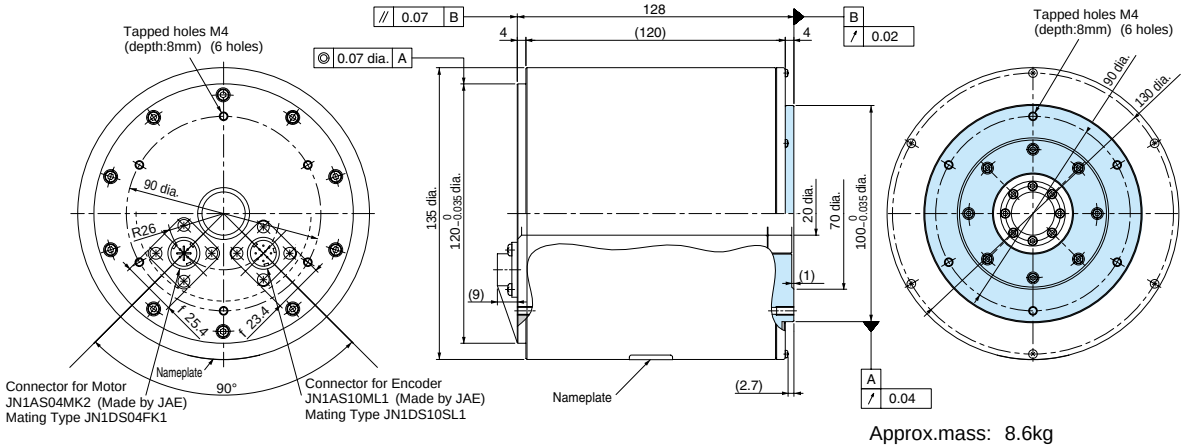

Approx.mass: 8.6kg

SGMCS-04C□B

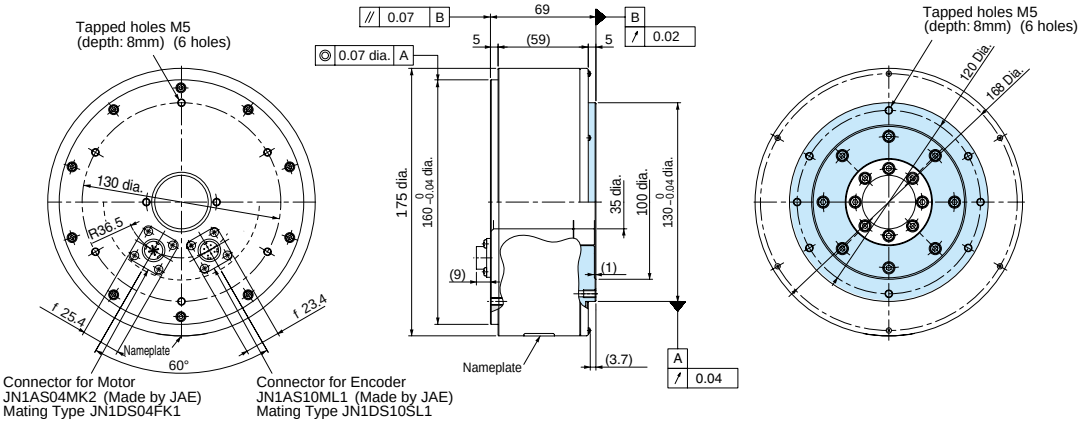

Approx.mass: 7.2kg

SGMCS-10C□B

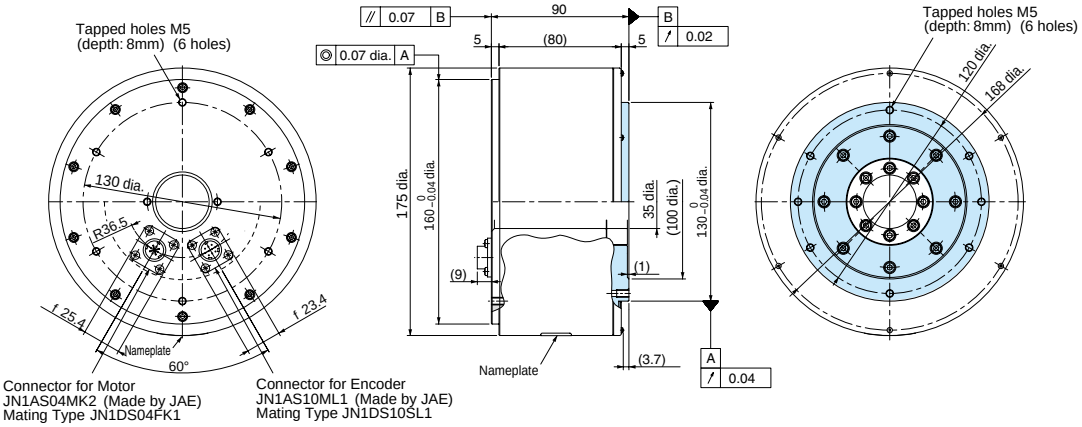

Approx.mass: 10.2kg

SGMCS-14C□B

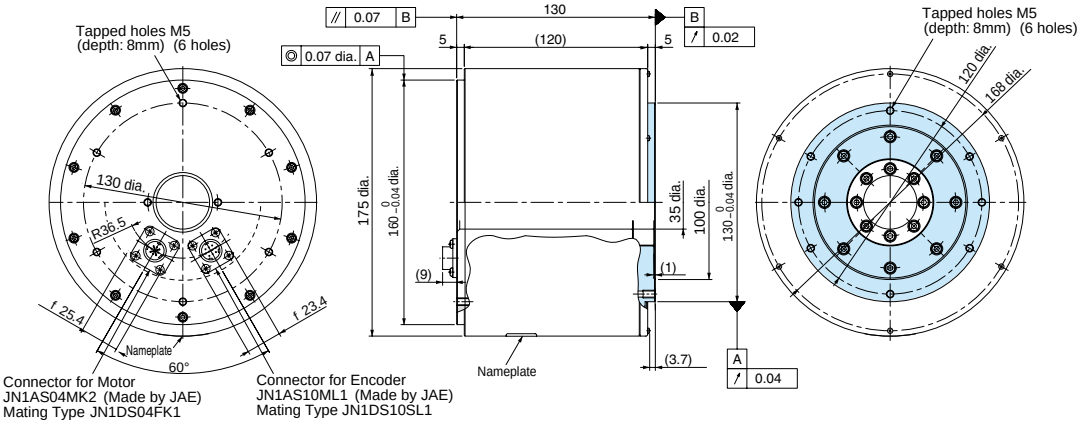

Approx.mass: 14.2kg

- Dimensions Units : mm

Rotating part:

SGMCS-08D□B

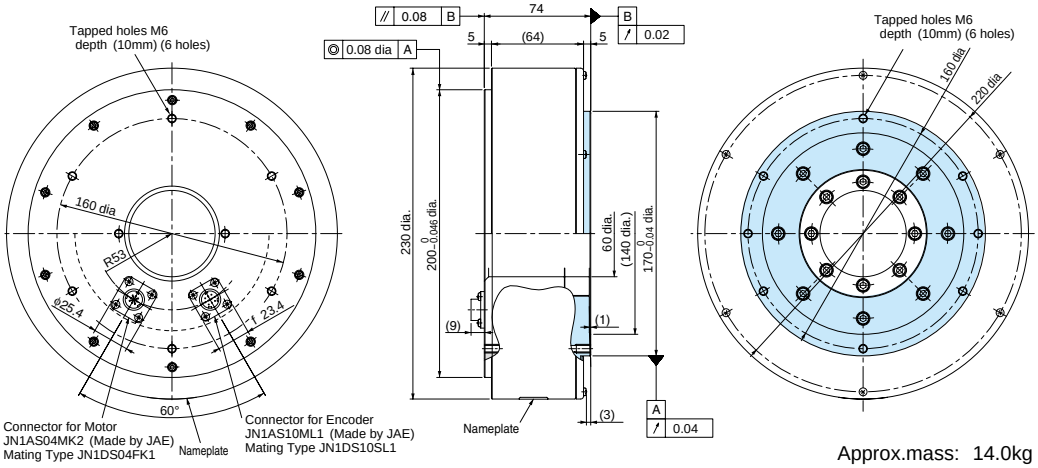

Approx.mass: 14.0kg

SGMCS-17D□B

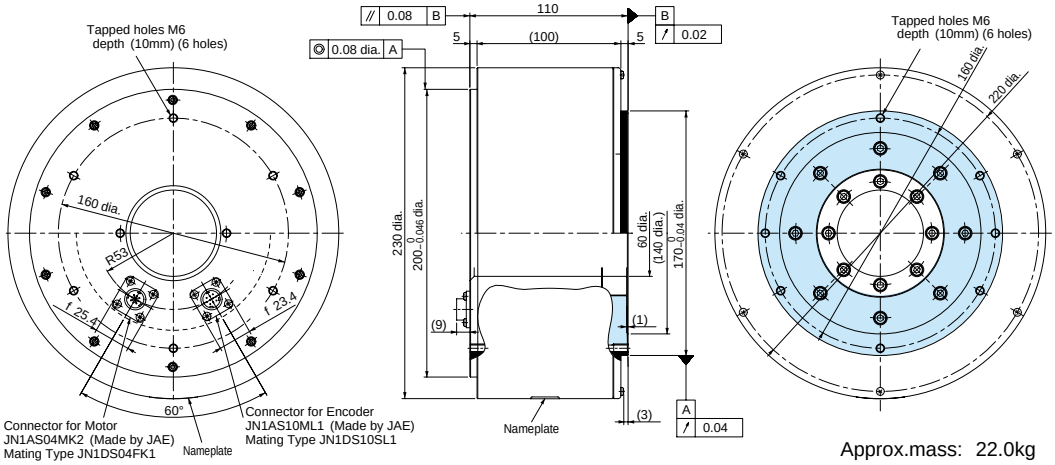

Approx.mass: 22.0kg

SGMCS-25D□B

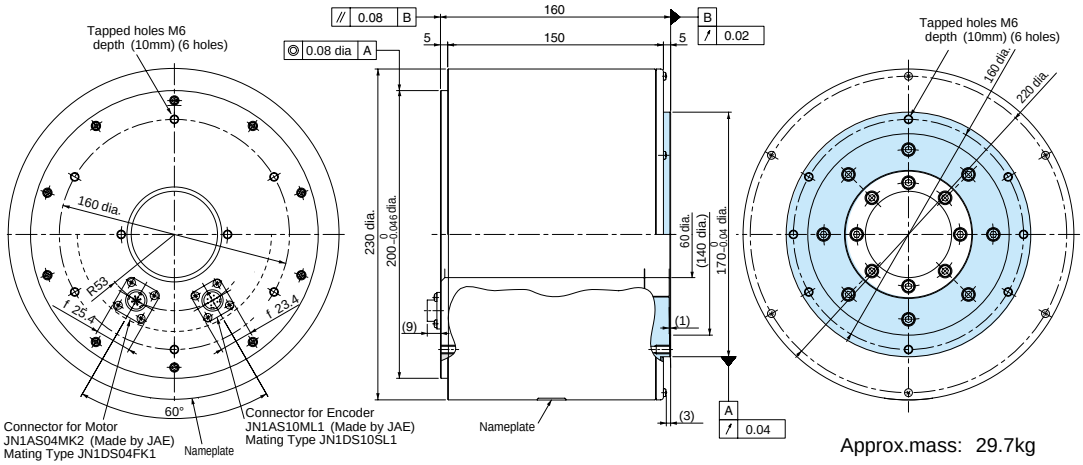

Approx.mass: 29.7kg

SGMCS-16E□B

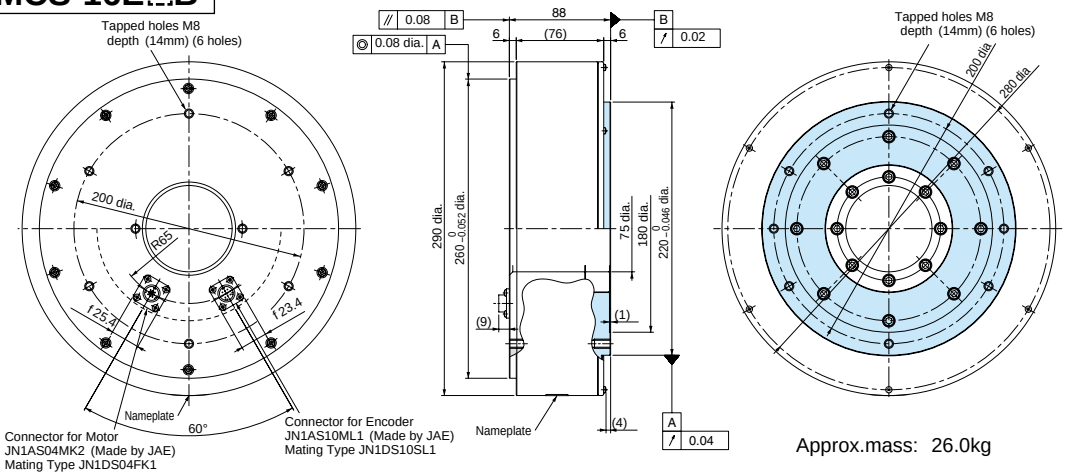

Approx.mass: 26.0kg

SGMCS-35E□B

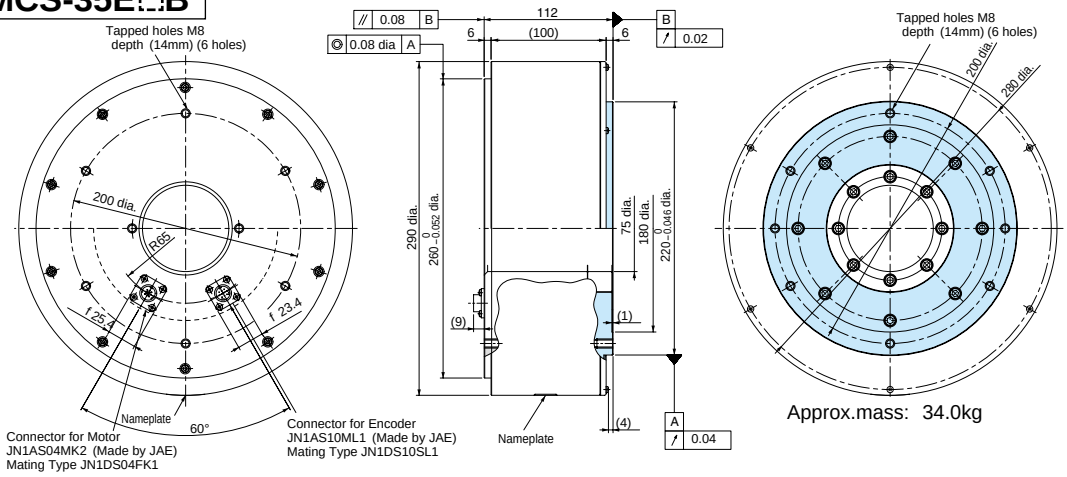

Approx.mass: 34.0kg

Motor connector (for small-capacity series)

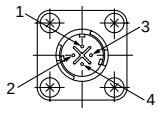

1	Phase U	Red
2	Phase V	White
3	Phase W	Blue
4	FG (Frame Ground)	Green (Yellow)

Encoder connector (for small-capacity series)

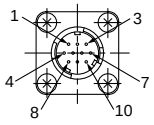

1	PS	Light Blue
2	*PS	Light Blue White
3	——	—
4	PG5V	Red
5	——	—
6	——	—
7	FG (Frame Ground)	Shield
8	——	—
9	PG0V	Black
10	——	—

Load Capacity

The following figures show the load capacity during motor operation.
Design motors so as not to exceed the values in the table for thrust and moment loading.

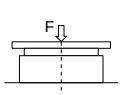

Force: F
Thrust Loading: Fa=F+Load's Mass
Moment Loading: M= 0

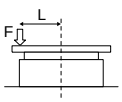

Force : F
Thrust Loading : Fa=F + Load's Mass
Moment Loading : M =F x L

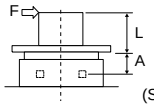

(See the table below for height of A.)

Force: F
Thrust Loading: Fa=Load's Mass
Moment Loading: M =F x (L + A)

Servomotor Type SGMCS-□		02B□B	05B□B	07B□B	04C□B	10C□B	14C□B	08D□B	17D□B	25D□B	16E□B	35E□B
Dimension A	mm	16.5	56.5	96.5	15.0	55.0	95.0	19.0	69.0	119.0	23.5	73.5
Allowable Thrust Load Fa	N	1500			3300			4000			11000	
Allowable Moment Load M	N-m	40	50	64	70	75	90	93	103	135	250	320

Servomotors (Medium-capacity)

- Ratings and Specifications

Time Rating	Continuous	**Ambient Temperature**	0 to +40°C
Thermal Class	F	**Ambient Humidity**	20 to 80% RH (non-condensing)
Withstand Voltage	1500VAC, 1min	**Excitation Format**	Permanent magnet
Insulation Resistance	500VDC, 10MW or more	**Drive Method**	Direct drive
Enclosure	Totally-enclosed,self-cooled	**Mounting Method**	Flange-mounted
Vibration Resistance	V15	**Enclosure Rating**	IP42

Servomotor Type		SGMCS-□□□					
		45M	80M	1AM	80N	1EN	2ZN
Rated Output*	W	707	1260	1730	1260	2360	3140
Rated Torque*	N-m	45	80	110	80	150	200
Instantaneous Peak Torque*	N-m	135	240	330	240	450	600
Stall torque*	N-m	45	80	110	80	150	200
Rated Current*	Arms	5.80	9.74	13.4	9.35	17.4	18.9
Instantaneous Max.Current*	Arms	17	28	42	28	56	56
Rated Speed*	min^{-1}	150	150	150	150	150	150
Max. Speed*	min^{-1}	300	300	300	300	250	250
Torque Constant	N-m/Arms	8.39	8.91	8.45	9.08	9.05	11.5
Rotor Moment of Inertia	kg-m^2 x 10^{-4}	388	627	865	1360	2470	3060
Rated Power Rate*	kW/s	52.2	102	140	47.1	91.1	131
Rated Angular Acceleration	Rad/s^2	1160	1280	1270	588	607	654
Absolute Accuracy	arc-sec	±15			±15		
Repeat Accuracy	arc-sec	±1.3			±1.3		

* These values and the Torque/Speed characteristics listed here are representative of the values obtained when the motor is driven from the SERVOPACK and the coil temperature is at 20°C
The values listed here are representative of the values obtained when a steel-plate heatsink (750 x 750 x45mm) is used for cooling.

- Torque / Speed Characteristics

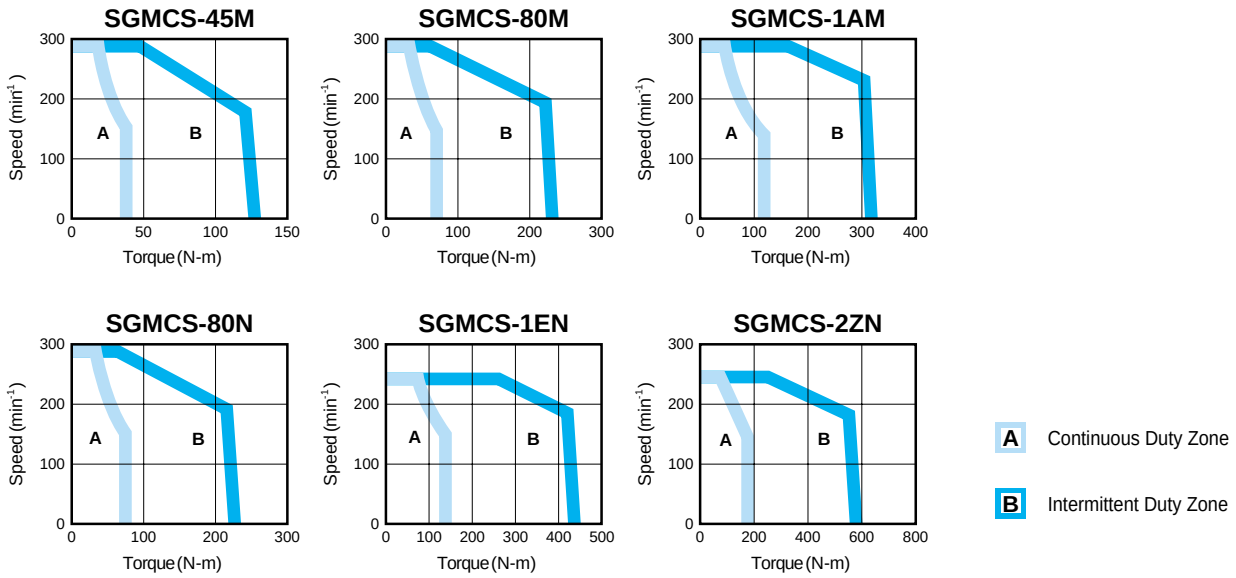

Load Capacity

The following figures show the load capacity during motor operation.
Design motors so as not to exceed the values in the table for thrust and moment loading.

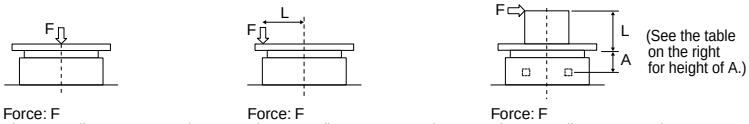

Force: F
Thrust Loading: Fa= F+ Load's Mass
Moment Loading: M = 0

Force: F
Thrust Loading: Fa=F+ Load's Mass
Moment Loading: M = F x L

Force: F
Thrust Loading: Fa= Load's Mass
Moment Loading: M =F x (L + A)

Servomotor Type SGMCS-□□□		45M	80M	1AM	80N	1EN	2ZN
Dimension A	mm	33			37.5		
Allowable Thrust Load Fa	N	9000			16000		
Allowable Moment Load M	N-m	180			350		

- Dimensions Units : mm

(Rotating part)

SGMCS-45M

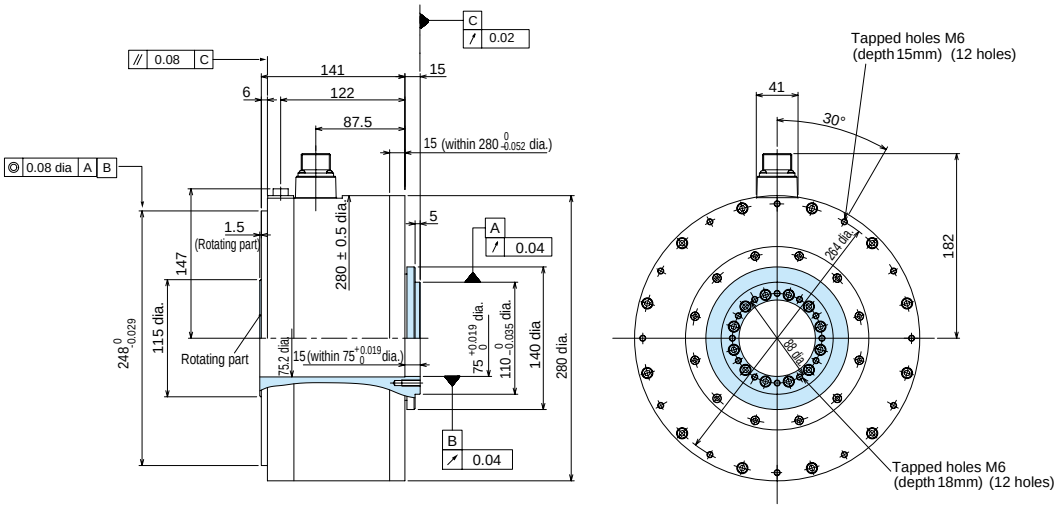

Approx.mass: 38kg

SGMCS-80M

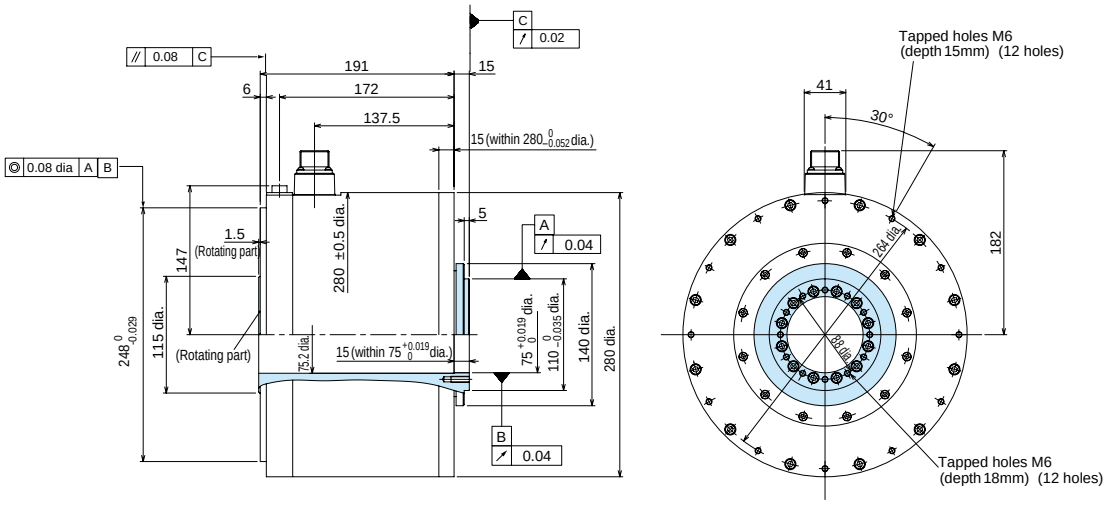

Approx.mass: 45kg

SGMCS-1AM

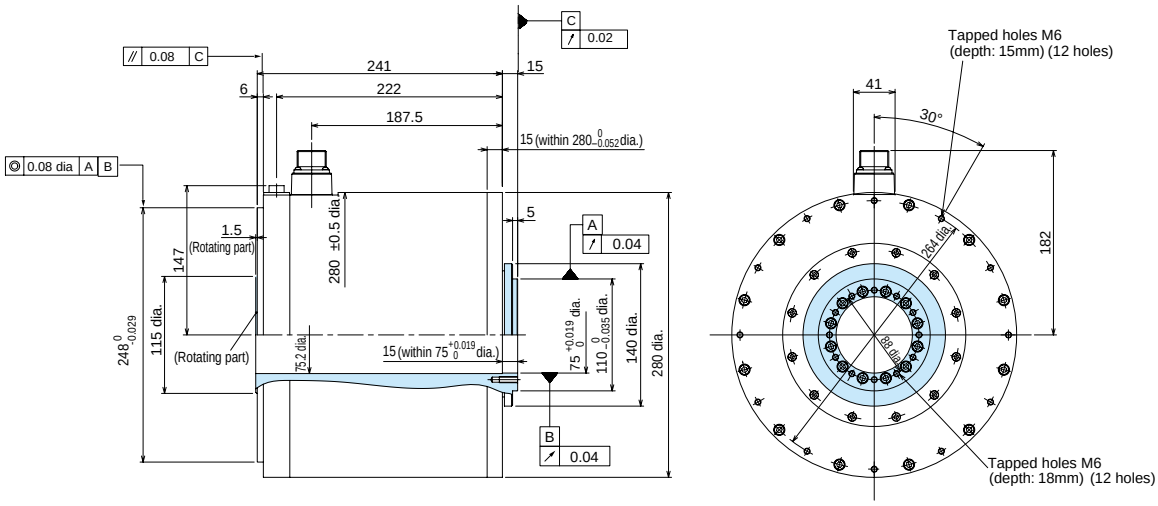

Approx.mass: 51kg

Encoder connector

Model:JN1AS10ML1
(Made by Japan Aviation Electronics Industry, Ltd.)

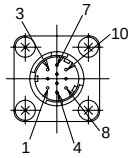

1	PS
2	*PS
3	——
4	PG5V
5	——
6	——
7	FG (Frame Ground)
8	——
9	PG0V
10	——

Motor connector

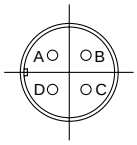

A	Phase U
B	Phase V
C	Phase W
D	FG (Frame Ground)

- Dimensions Units : mm

Rotating part:

SGMCS-80N

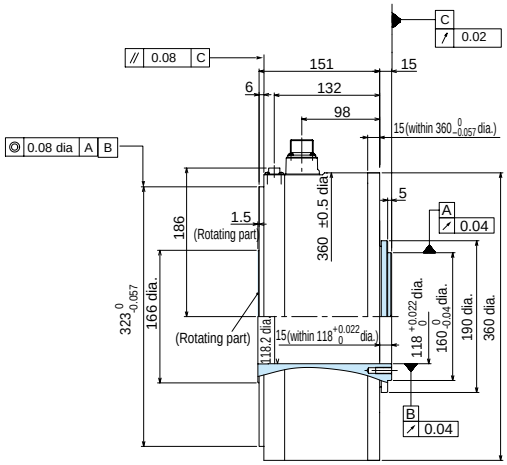

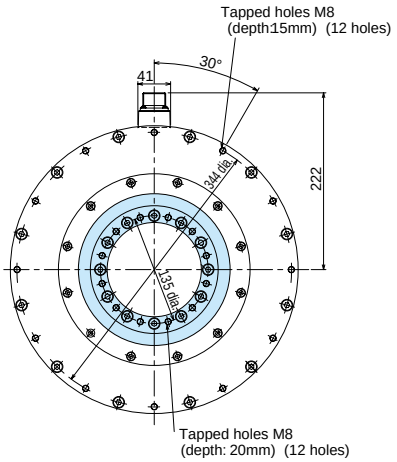

Approx.mass: 50kg

SGMCS-1EN

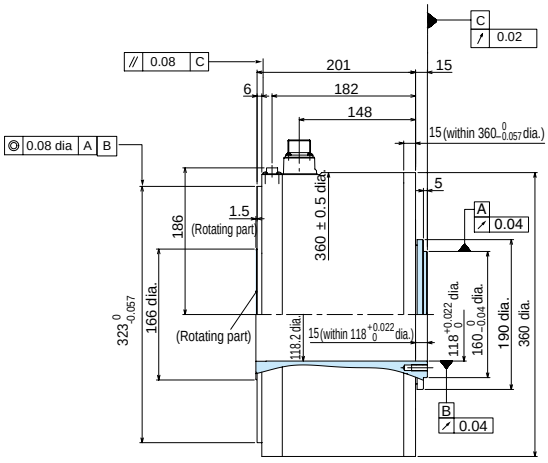

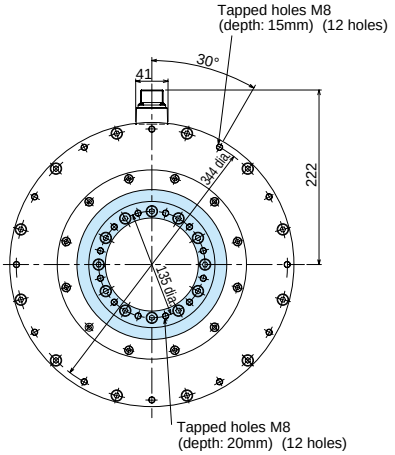

Approx.mass: 68kg

SGMCS-2ZN

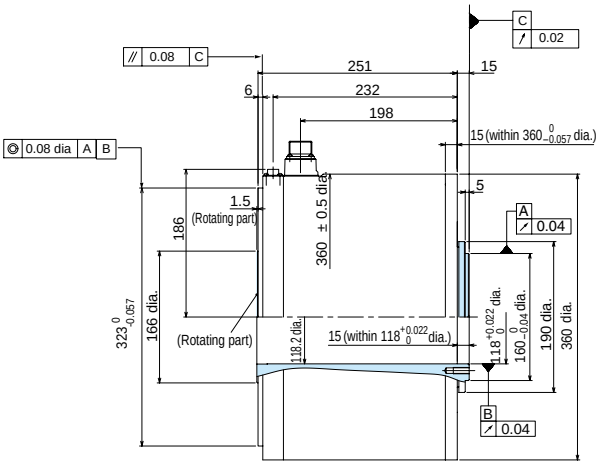

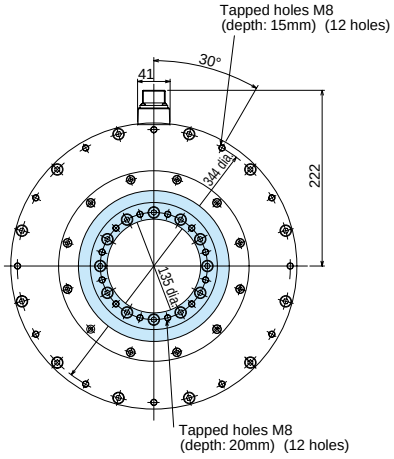

Approx.mass: 86kg

Encoder connector

Model:JN1AS10ML1
(Made by Japan Aviation Electronics Industry, Ltd.)

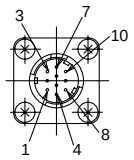

1	PS
2	*PS
3	——
4	PG5V
5	——
6	——
7	FG (Frame Ground)
8	——
9	PG0V
10	——

Motor connector

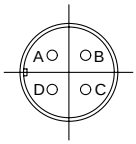

A	Phase U
B	Phase V
C	Phase W
D	FG (Frame Ground)

- Ratings and Specifications

SGDH

SERVOPACK Type	SGDH-	02AE	04AE	08AE	10AE	15AE	20AE	30AE
Applicable Servomotor Type	SGMCS-	02B, 05B, 07B	04C, 10C, 14C, 08D, 17D, 25D	16E, 35E	45M	80M, 80N	1AM	1EN, 2ZN
Max. Applicable Servomotor Capacity	kW	0.2	0.4	0.75	1.0	1.5	2.0	3.0
Continuous Output Current	Arms	2.1	2.8	5.7	7.6	11.6	18.5	24.8
Max. Output Current	Arms	6.2	8.5	13.9	17	28	42	56
Input Power Supply	Main Circuit	Single-phase 200 to 230 VAC +10 to -15% 50/60Hz		Three-phase 200 to 230 VAC +10 to -15% 50/60Hz				
	Control Circuit	Single-phase 200 to 230VAC +10 to -15% 50/60Hz						
Control Method		Single-phase full-wave rectification, IGBT, PWM control, Sine wave power drive system		Three-phase full-wave rectification, IGBT, PWM control, Sine wave power drive system				
Feedback		20-bit serial encoder (incremental/absolute)						
Structure		Base-mounted type (Rack-mounted type is also available.)						
Approx. Mass	kg	0.8	1.1	1.7	1.7	2.8	3.8	3.8

Basic Specifications	Conditions	Usage/Storage Temperature		Usage Temperature : 0 to +55℃ / Storage Temperature: -20 to +85℃
		Usage/Storage Humidity		90% RH or less (non-condensing)
		Altitude		1000m or less
		Vibration/Shock Resistance		Vibration Resistance: 4.9m/s^2 and Shock Resistance : 19.6m/s^2
Speed/Torque Control Mode	Performance	Speed Control Range		1 : 5000 (The lower limit is within the range not to stop at the torque load.)
		Speed Regulation	Load Regulation	0 to 100% load : ±0.01% max. (at rated speed)
			Voltage Regulation	Rated voltage ±10% : 0% max. (at rated speed)
			Temperature Regulation	25 ±25℃: ±0.1% max. (at rated speed)
		Frequency Characteristics		400 Hz (at JL = JM)
		Torque Control Tolerance(Repeatability)		±2
		Soft Start Time Setting		0 to 10s (Acceleration or deceleration can be set.)
	Input Signals	Speed Reference	Reference Voltage	±6 VDC (Forward rotation if positive reference) / Rated speed Factory settings Variable setting range : ±2 VDC to ±10 VDC/ Rated speed, Allowable input voltage : 12V max.
			Input Impedance	Approx. 14k
			Circuit Time Constant	Approx. 47 s
		Torque Reference	Reference Voltage	±3 VDC (Forward rotation if positive reference) / Rated speed Factory settings Variable setting range ±1 VDC to ±10 VDC/ Rated speed, Allowable input voltage : 12V max.
			Input Impedance	Approx. 14k
			Circuit Time Constant	Approx. 47 s
Positioning Control Mode	Performance	Bias Setting		0 to 450 min^{-1} (setting resolution 1 min^{-1})
		Feed Forward		0 to 100% (setting resolution: 1%)
		Positioning Completion Width Setting		0 to 450 reference unit (setting resolution: 1 reference unit)
	Input Signals	Reference Pulse	Pulse Type	Select one signal from: sign+pulse train, CCW+CW pulse train, and 90°phase difference 2-phase pulse (phase A + phase B)
			Pulse Form	Line driver (+5V level), Open collector (+5V or +12V level)
			Pulse Frequency	0 kpps to 250 kpps, 200 kpps max. when an open collector is used.
		Control Signal		CLEAR (An input pulse form is identical to a reference pulse.)
I/O Signals	Position Output			Phase A, phase B, or phase C (phase S used only with an absolute encoder): Line driver output
	Sequence Input Signal			Servo ON, P control (or control mode switching, zero clamp, or reference pulse inhibit), forward/reverse run prohibit(P-OT/N-OT), alarm reset forward/reverse current limit (or internal speed switching)
	Sequence Output Signal			Servo alarm, alarm code (3-bit output): Output terminal for CN1 is fixed. Select three signals: servo ready, positioning completion (speed coincidence), running current limit, speed limit, brake release, warning, or NEAR signal.
Integrated Functions	Communications	Interface		Digital operator (hand-held) RS-422A port for PCs (RS-232C port can be used under some conditions)
		1: N communications		N may be as high as 14 when an RS-422A port is used.
		Axis Address Setting		Set by parameters.
		Functions		Status display, parameter settings, monitor display, alarm traceback display, JOG run, autotuning, and graphing for speed or torque reference signal
	Autotuning			Position/speed loop gain and integral time constant can be automatically set.
	Dynamic Brake (DB)			Automatic built-in DB is activated at main power OFF, servo alarm, servo OFF, and overtravel
	Regeneration			External regenerative resistor (option): 200W to 400W: Built-in regenerative resistor: 750W to 3kW
	Overtravel(OT) Prevention			DB stop, deceleration stop, or coast to stop at P-OT or N-OT
	Encoder Divider			The number of pulses that can be set is limited.
	Electronic Gear			0.01< A/B <100
	Internal Speed Setting			Three speeds may be internally set.
	Protective Functions			Overcurrent, overvoltage, undervoltage, regeneration error, main circuit detection error, heatsink overheating, power phase loss, overflow, overspeed, encoder error, overrun protection, CPU error, parameter error, etc
	Analog Monitor			Analog monitor connector for supervision of speed and torque reference signals, etc. integrated
	Indicators (LED Display)			CHARGE, POWER, 7segment-LED x5 (Integrated digital operator function)
	Others			Reverse connection, zero search, DC reactor for suppressing high harmonic waves, automatic motor discrimination function

- Dimensions Units : mm

SGDH-02

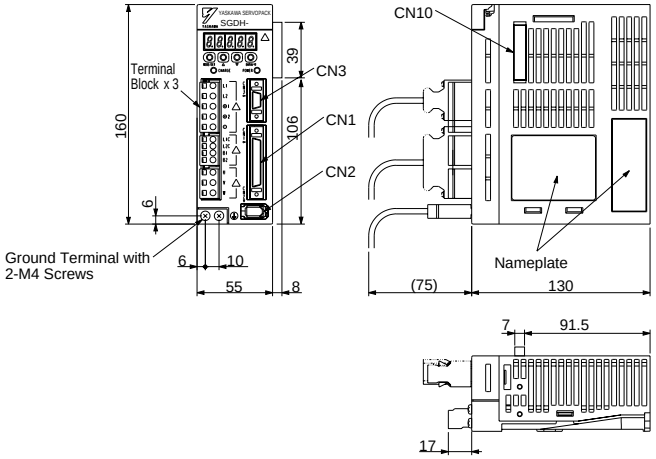

Mounting Hole Diagram

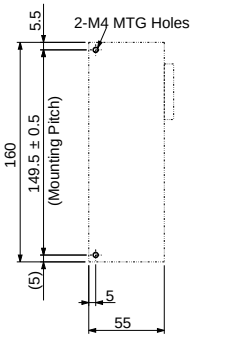

Approx.mass: 0.8kg

SGDH-04

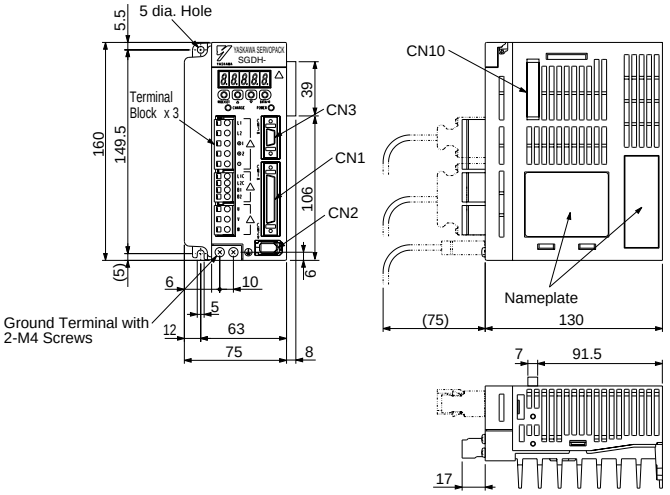

Mounting Hole Diagram

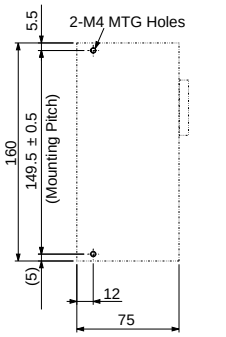

Approx.mass: 1.1kg

SGDH-08, -10

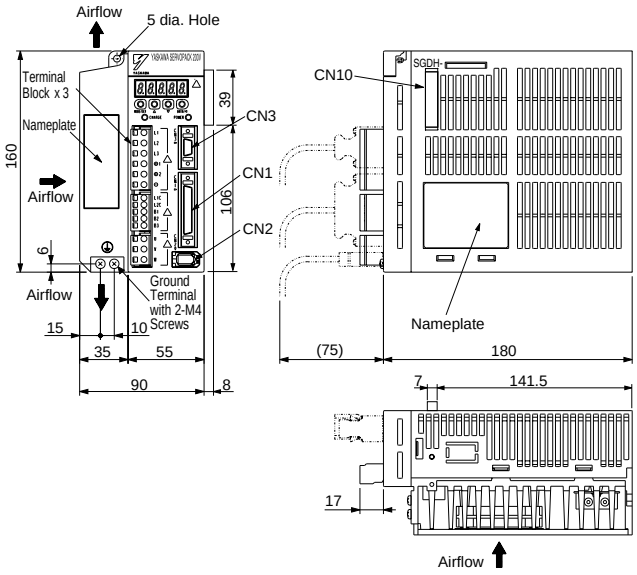

Mounting Hole Diagram

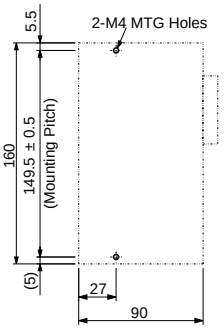

Approx.mass: 1.7kg

SGDH-15

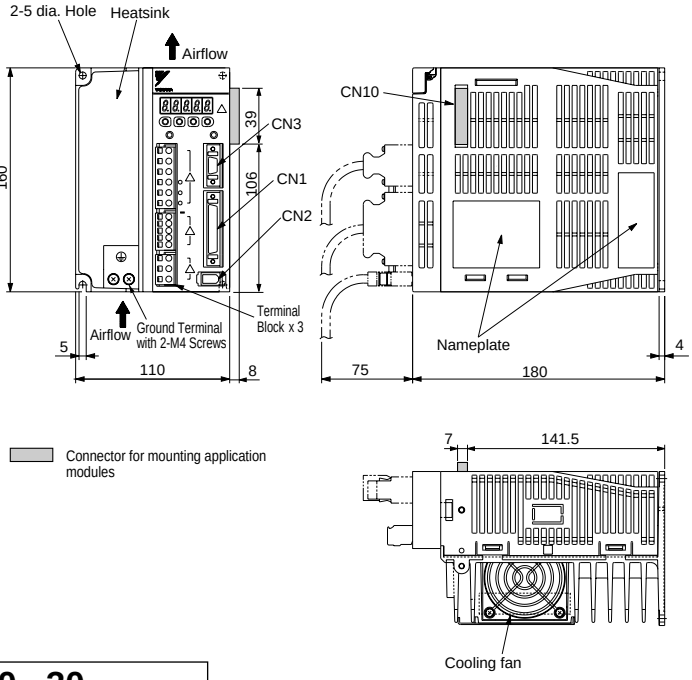

Mounting Hole Diagram

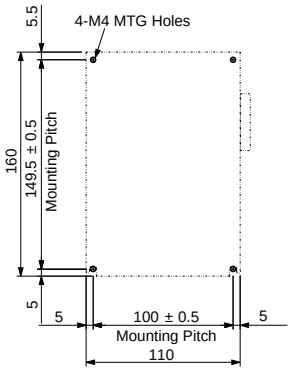

Approx.mass: 2.8kg

SGDH-20, -30

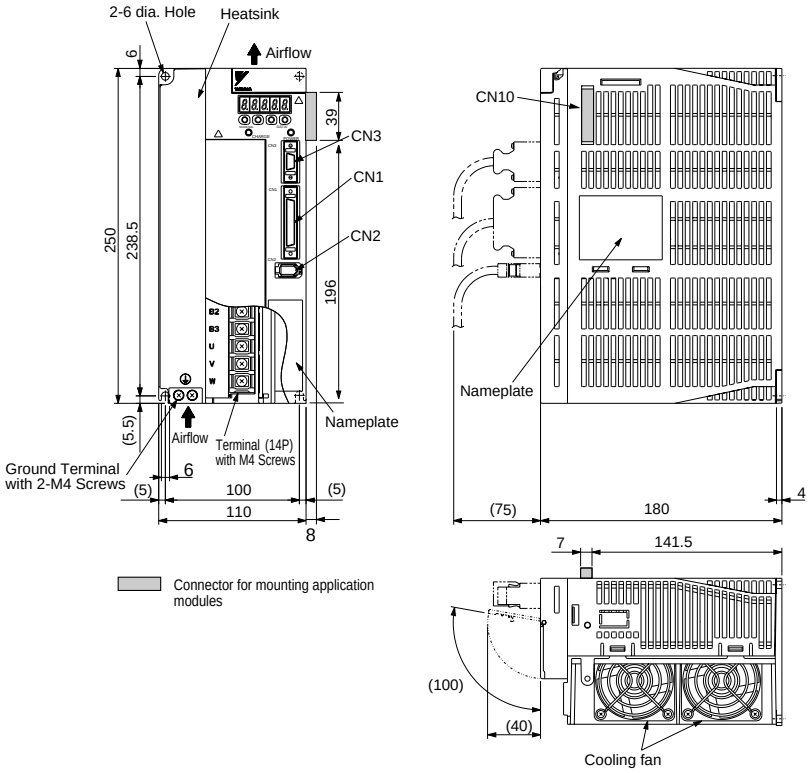

Mounting Hole Diagram

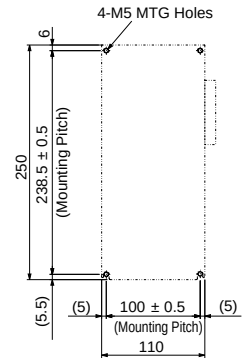

Approx.mass: 3.8kg

Connectors on SERVOPACK Side (Common for all types)

Connector Code	Type	Manufacturer
CN1	10250-52A2JL	SUMITOMO 3M Ltd.
CN2	53460-0611	Molex Japan Co., Ltd.
CN3	10214-52A2JL	SUMITOMO 3M Ltd.

Note: Use connectors above or equivalent.

- Single-phase 200VAC (When using SGDH SERVOPACK)

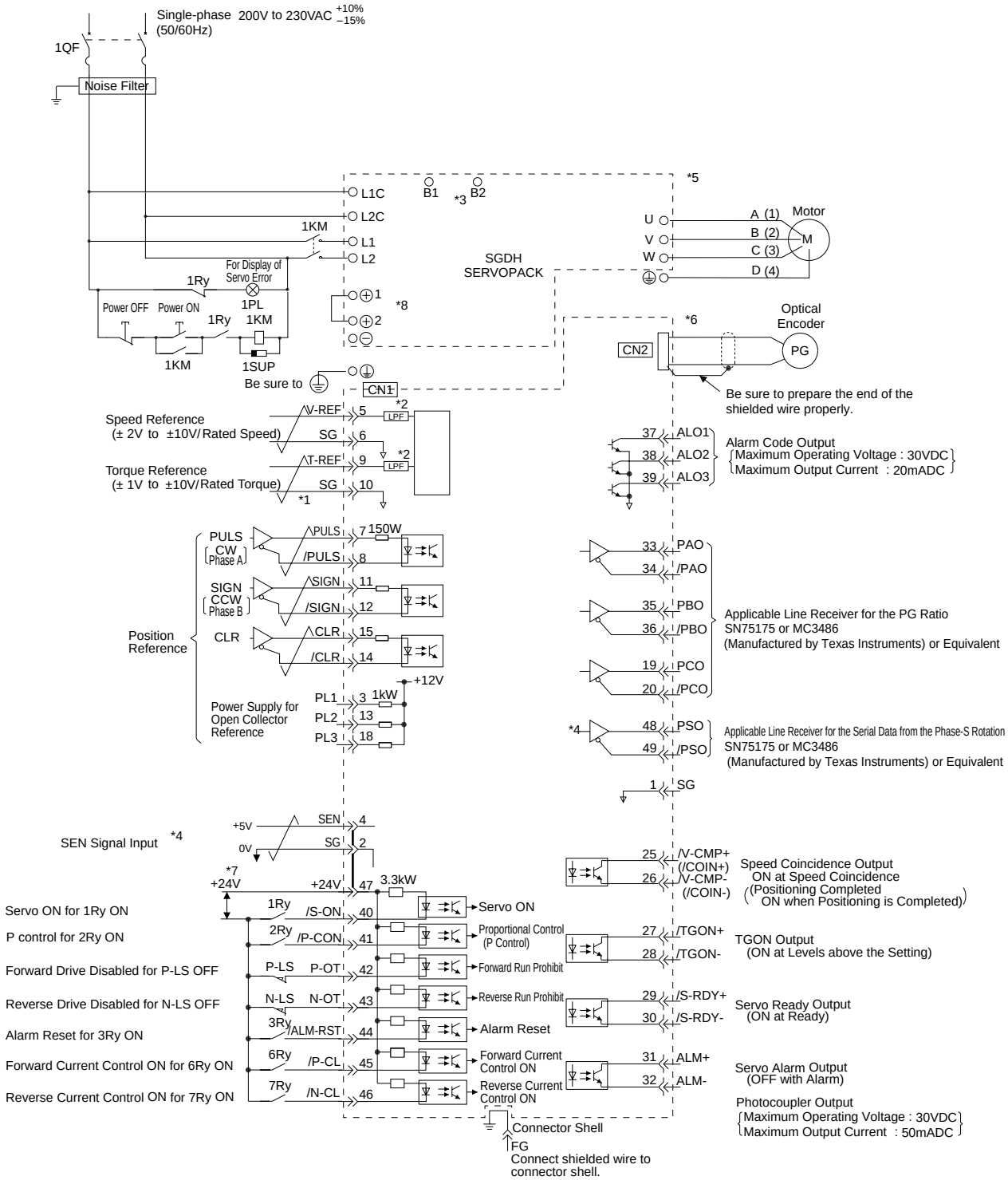

*1 represents twisted-pair wire.
*2 •Primary filter. The time constant is 47 ms
*3 •A regenerative resistor can be connected between terminals B1 and B2.
*4 •For use with an absolute encoder
*5 •This circuit is electrically separated from the outside to prevent electrical shock.
*6 •This is a SELV circuit separated from other circuit by double insulation or reinforced insulation.
*7 •Use a double insulated 24VDC power supply.
*8 •Place a DC reactor between terminals ⊕1 and ⊕2 to suppress high harmonic waves.

- Three-phase 200VAC (When using SGDH SERVOPACK)

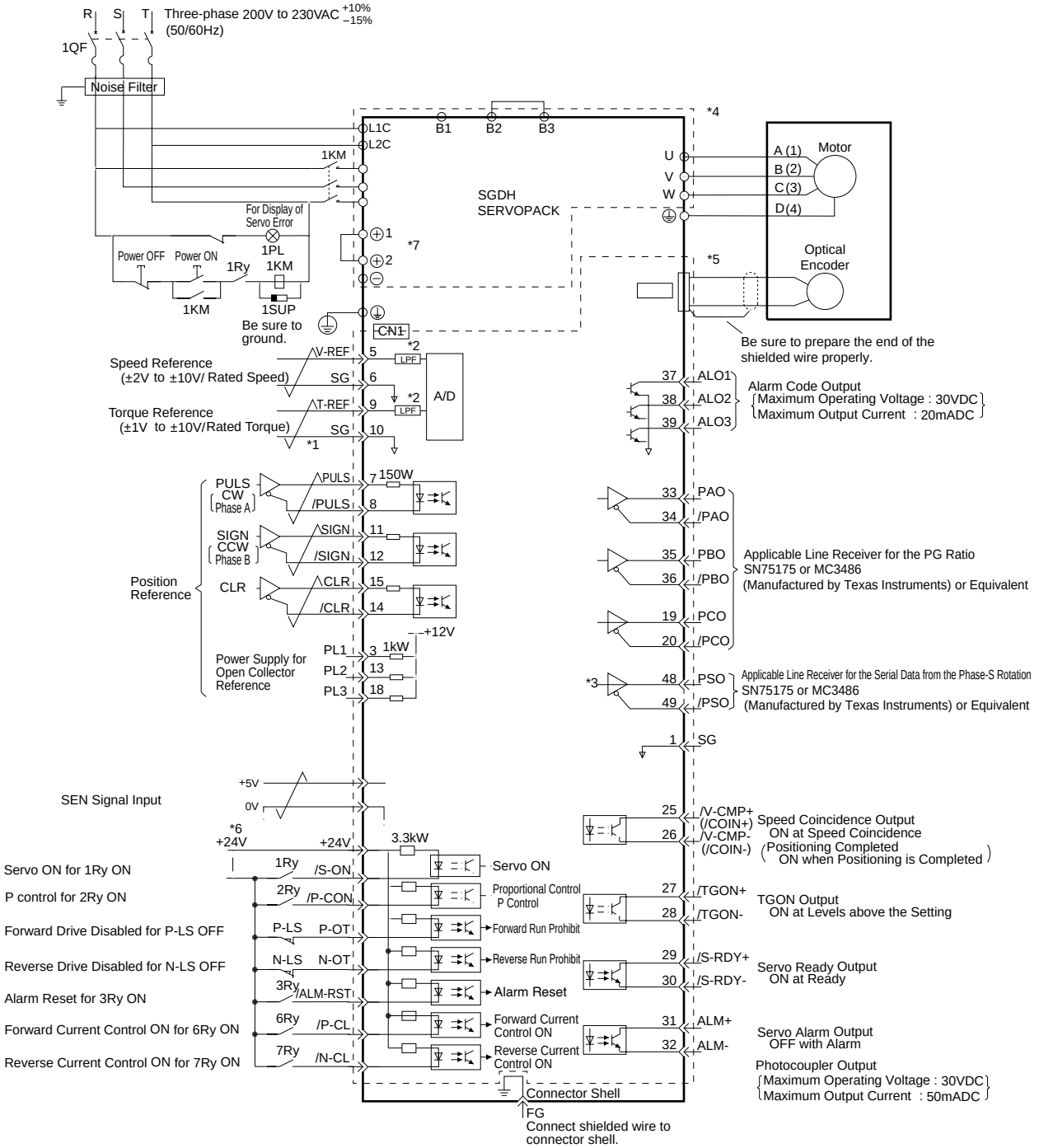

*1: represents twisted-pair wire.
*2: Primary filter. The time constant is 47 ns
*3: For use with an absolute encoder
*4: This circuit is electrically separated from the outside to prevent electrical shock.
*5: This is a SELV circuit separated from other circuit by double insulation or reinforced insulation.
*6: Use a double insulated 24VDC power supply.
*7: Place a DC reactor between terminals ⊕1 and ⊕2 to suppress high harmonic waves.

Ordering Reference

- System Configuration

Refer to the following pages for ordering.
Servo drives p.20
Peripheral Devices (1) to (5) p.21
Cables and Connectors p.22

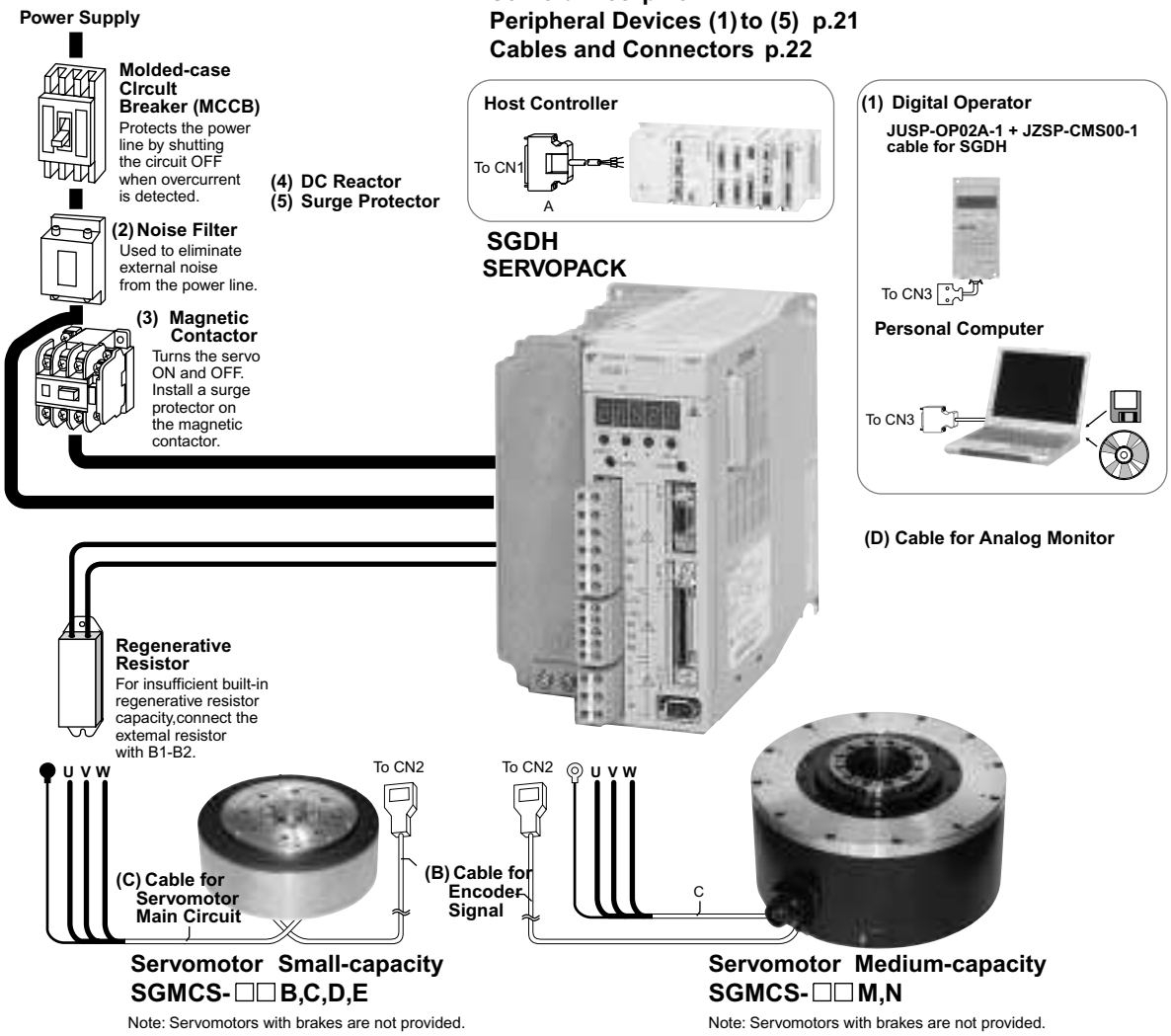

- Order List

Servo Drives

Servomotor				SERVOPACK		
Series		Type SGMCS-	Rated Torque	SGDH-		Qty.
				Single-phase 200V	Three-phase 200V	
Small-capacity	Outer diameter: 135mm	02B3B11	2 N·m	02AE		
		05B3B11	5 N·m	02AE		
		07B3B11	7 N·m	02AE		
	Outer diameter: 175mm	04C3B11	4 N·m	04AE		
		10C3B11	10 N·m	04AE		
		14C3B11	14 N·m	04AE		
	Outer diameter: 230mm	08D3B11	8 N·m	04AE		
		17D3B11	17 N·m	04AE		
		25D3B11	25 N·m	04AE		
	Outer diameter: 290mm	16E3B11	16 N·m		08AE	
		35E3B11	35 N·m		08AE	
Medium-capacity	Outer diameter: 280mm	45M3B31	45 N·m		10AE	
		80M3B31	80 N·m		15AE	
		1AM3B31	110 N·m		20AE	
	Outer diameter: 360mm	80N3B31	80 N·m		15AE	
		1EN3B31	150 N·m		30AE	
		2ZN3B31	200 N·m		30AE	

Peripheral Devices

Name	Part Number	Specifications		Dimensions P.26	Qty.
(1) Digital Operator	JUSP-OP02A-1	SGDH- Requires cable below			
Cable	(JZSP-CMS00-1)	1m	Required when a JUSP-OP02A-1 digital operator for the Sigma series is used. (When using SGDH SERVOPACK)		
(2) Noise Filter (Made by Schaffner EMC Inc.)	FN2070-6/07	Power supply voltages and capacities for applicable SERVOPACKs	Single-phase 200 V 200W	B	
	FN2070-10/07		Single-phase 100 V 200W Single-phase 200 V 400W		
	FN2070-16/07		Single-phase 100 V 400W Single-phase 200 V 750W		
	FN258L-16/07		Three-phase 200 V 0.75kW to 2kW		
	FN258L-30/07		Three-phase 200 V 3 W		
(4) DC reactor for suppressing high harmonic waves	X5070	Power supply voltages and capacities for applicable SERVOPACKs	Single-phase 200V 200W	C	
	X5069		Single-phase 200V 400W		
	X5061		Three-phase 200V 750W		
	X5060		Three-phase 200V 1.5kW 2kW		
	X5059		Three-phase 200V 3kW		
Monitoring and Setup Software (requires interface cable)	TBD	For SGDH amp (compatible with Windows 95, 98, NT; on a CD ROM)			
Software Interface Cable	YS12	Pre-wired 2.0m cable with 9 pin connector			

Cables and Connectors

Name		Part Number	Specifications	Dimensions (P.26, 27)	Qty.
(A) CN 1 For I/O Signals	Connector to Terminal Conversion Unit	JUSP-TA50P	Terminal block and cable (0.5 m) 	D	
	Cable with Single Connector (SGDH)	JZSP-CKI01-1(A)	1m 	E	
		JZSP-CKI01-2(A)	2m		
		JZSP-CKI01-3(A)	3m		
	Connector Kit for CN1	JZSP-CKI9	SGDH Connector and Case 	F	
(B) CN 2 ↕ Encoder	Cable with Both End Connectors	JZSP-CMP60-03	3m 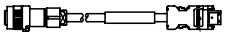	G	
		JZSP-CMP60-05	5m		
		JZSP-CMP60-10	10m		
		JZSP-CMP60-15	15m		
		JZSP-CMP60-20	20m		
(C) Terminals on SERVOPACK ↕ Motor	Cable for Servomotor Main circuit Type SGMCS-☐☐B -☐☐C -☐☐D -☐☐E	JZSP-CMM60-03	3m 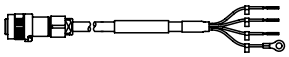	H	
		JZSP-CMM60-05	5m		
		JZSP-CMM60-10	10m		
		JZSP-CMM60-15	15m		
		JZSP-CMM60-20	20m		
	Cable for Servomotor Main circuit Type SGMCS-☐☐M -☐☐N	B1E-03(A)	3m	J	
		B1E-05(A)	5m		
		B1E-10(A)	10m		
		B1E-15(A)	15m		
		B1E-20(A)	20m		
(D) CN 5	Cable for Analog Monitor	DE9404559	1m	I	

Dimensions for Peripheral Devices and Cables Units : mm

Ⓑ Noise Filter (Screw-terminal model)

Available from Schaffner EMC Inc. (www.schaffner.com)

Figure 1

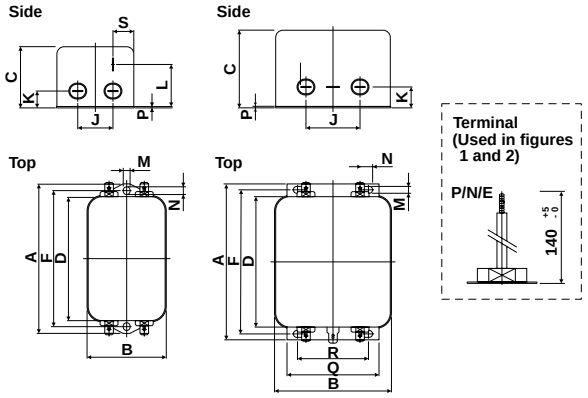

Figure 2

Figure 3

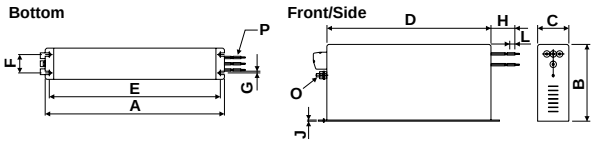

Code	Tolerances	Type		
		FN2070-6/07	FN2070-10/07	FN2070-16/07
		Figure 1		Figure 2
A	±1	113.5	156	119 ±0.5
B	±1	57.5		85.5
C		45.4 ±1.2		57.6
D	±1	94	130.5	98.5
F	±0.3	103	143	109
J	±0.2	25		40
K	±0.5	8.4		8.6
L	±0.5	32.4		
M	±0.1	4.4	5.3	4.4
N	±0.1	6		7.4
P	±0.1	0.9		1.2
Q	±0.3			66
R	±0.2			51
S	±0.5	38		
Spec.*1		250VAC 6A	250VAC 10A	250VAC 16A

Code	Tolerances	Type	
		FN258L-16/07	FN258L-30/07
		Figure 3	
A	±1	305	335
B		142 ±0.8	150 ±1
C	±0.6	55	60
D	±1	275 ±0.8	305
E	±0.5	290	320
F	±0.3	30	35
G	±0.2	6.5	6.5
H	±10	300	400
J	±0.2	1 ±0.1	1.5
L	±1	9	12
O		M5	M6
P		AWG14	AWG10
Spec.*2		480VAC 16A	480VAC 30A

*1 The rated current is +40°C
*2 The rated current is +50°C

Ⓒ DC Reactor for Suppressing High Harmonic Waves

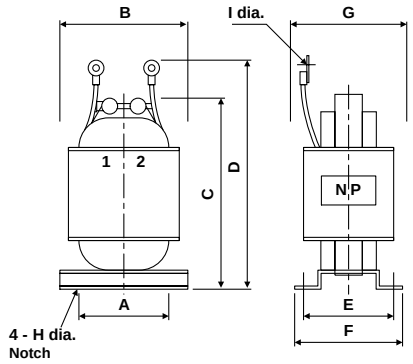

Reactor Type*	Inductance mH	Rated Current A	Dimensions (mm)									Mass (kg)
			A	B	C	D	E	F	G	H	I	
X5070	20.0	1.65	40	59	100	120	35	45	50	4	4.3	0.8
X5069	10.0	3.3	40	59	105	125	45	60	65	4	4.3	1.0
X5061	2.0	4.8	35	52	80	95	35	45	50	4	4.3	0.5
X5060	1.5	8.0	40	59	105	125	45	60	65	4	4.3	1.0
X5059	1.0	14.0	50	74	125	140	35	45	60	5	5.3	1.1

* Type used for orders from the Yaskawa Electric Corporation.

Ⓓ Connector to Terminal Conversion Unit (for CN1)

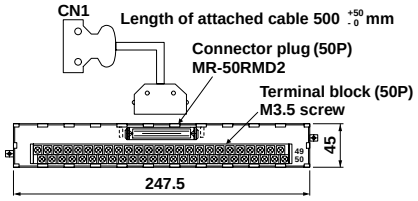

Ⓔ Cable with Single Connector (for CN1)

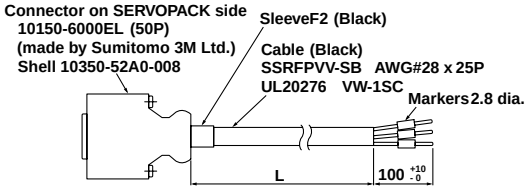

Ⓕ Connector Kit for I/O Signals (for CN1) JZSP-CKI9

Connector 10150-3000VE (3M Part Number)

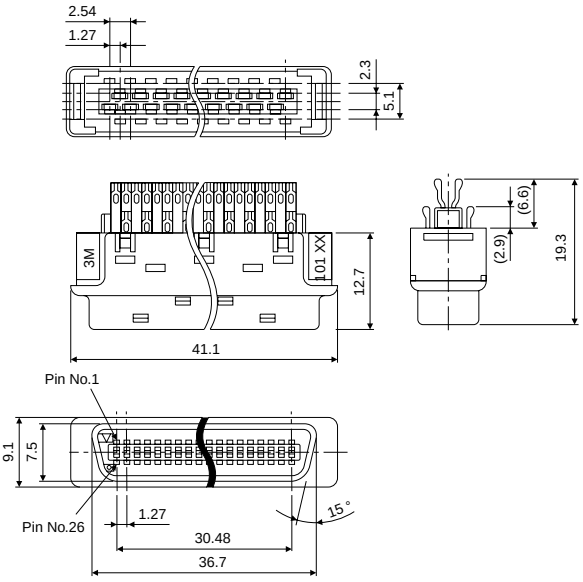

Case: 10350-52A0-008 (3M Part Number)

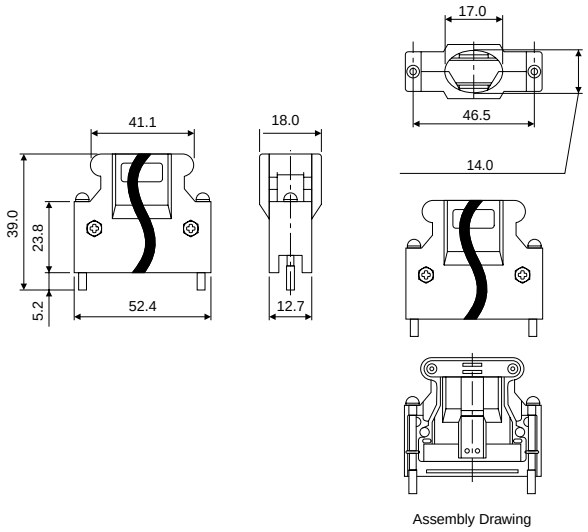

Assembly Drawing

Ⓖ Cable with Both End Connectors (for CN2) JZSP-CMP60-XX

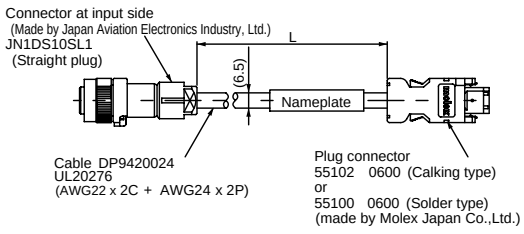

Ⓗ Cable for Servomotor Main Circuit JZSP-CMM60-XX (Sm. Cap. Only)

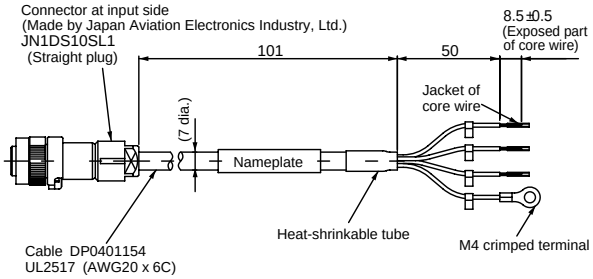

Ⓘ Cable for Analog Monitor DE9404559

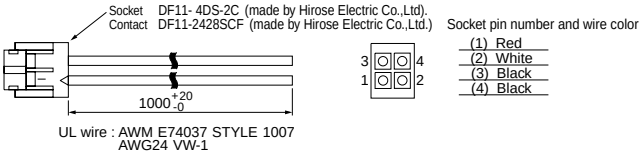

Ⓙ Cable for Servo Motor Main Circuit B1E-XX (A) (Med. Cap. Only)

Contact Sales Representative for construction details.